new to range

THANKS TO AYD POWER AND ALL UNDER ONE ROOF STRATEGY

AYD®
AUTOMOTIVE INDUSTRY

BRAKING NEW GROUND

OEM Standards
AYD Quality
Safety
Performance

MADE IN TURKEY OE CERTIFIED STANDART

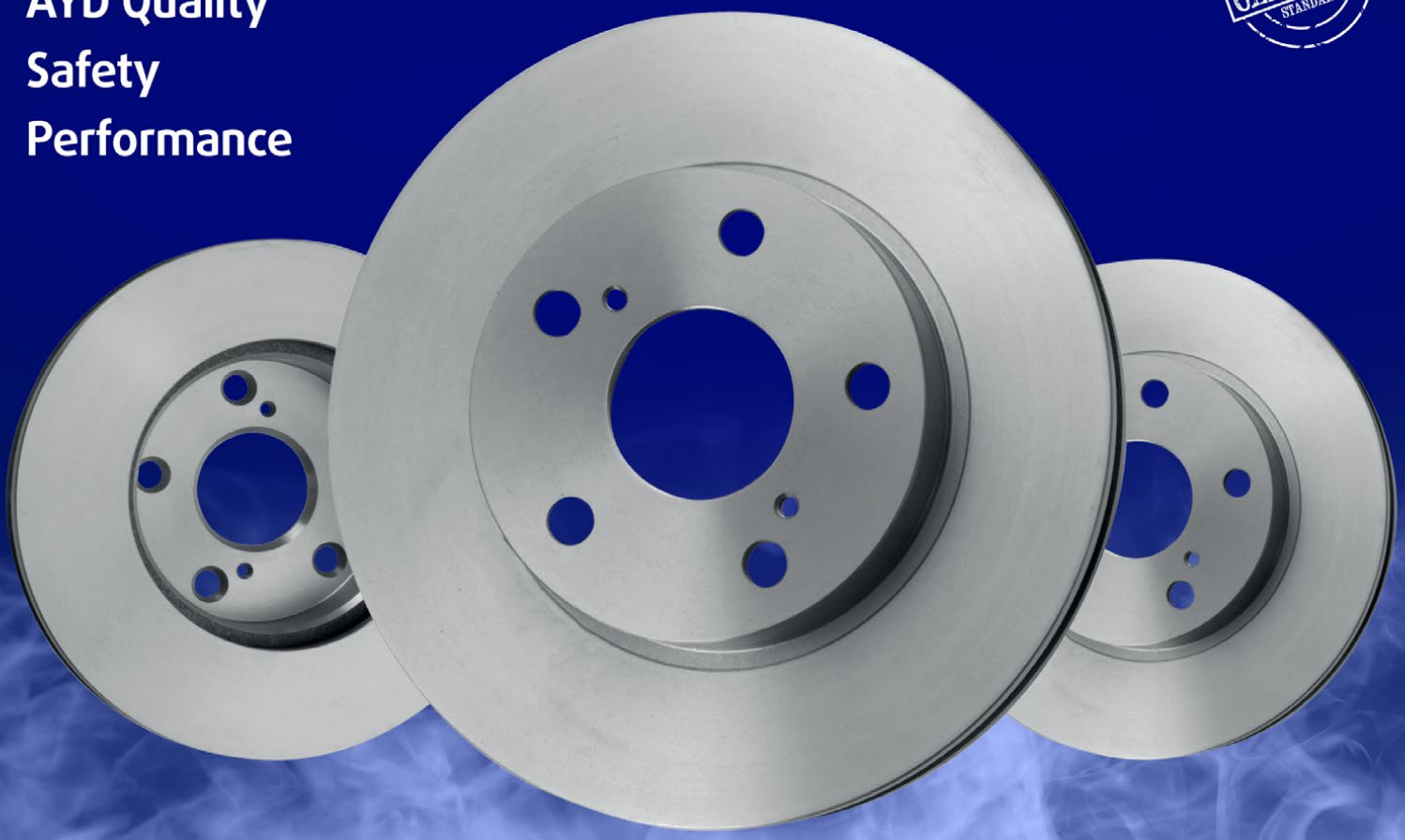

www.aydtr.com

TÜRKİYE'NİN 500 BÜYÜK SANAYİ KURULUŞU

TİM TÜRKİYE'NİN İLK 1000 İHRACATÇI FİRMASI TOP 1000 EXPORTERS OF TURKEY

NOVEMBER 2021

INDEX

ALFA ROMEO 3-5
AUDI 6-9
CHRYSLER 10
CITROEN 11-15
DACIA 16-18
FIAT 19-26
FORD 27-33
HONDA 34
HYUNDAI 35-36
IVECO 37
KIA 38-39
LANCIA 40-42
MERCEDES BENZ 43-44
NISSAN 45
OPEL 46-50
PEUGEOT 51-55
RENAULT 56-59
SAAB 60
SEAT 61-65
SKODA 66-71
SMART 72
VAUXHALL 73-75
VOLKSWAGEN 76-81

BRAKE DISC

- Front Axle
- Rear Axle
- Solid

·OEM Standarts
·AYD Quality
·Safety
·Performance

OE:
7566931
7663465
7163465

10-50161

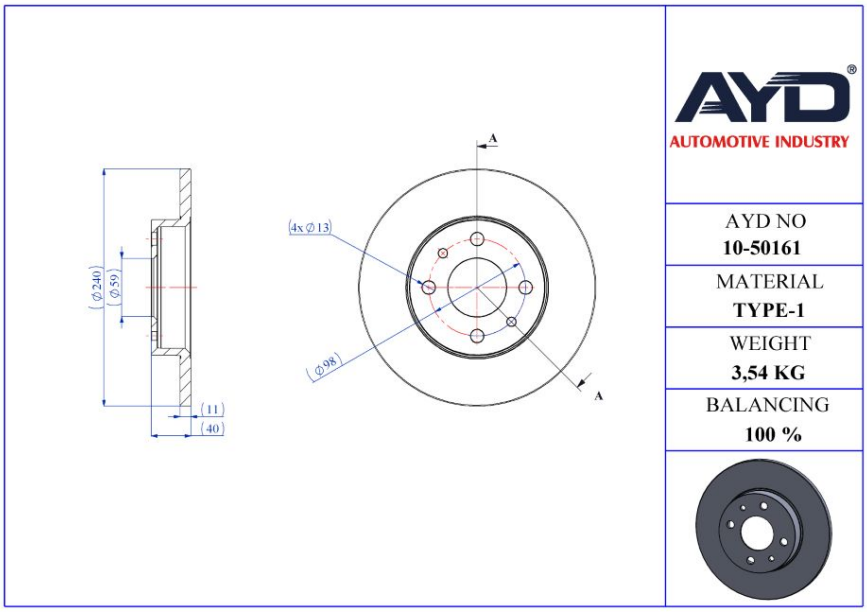

Technical Specifications:

Diameter (mm)	Height (mm)	Brake Disc Thickness (mm)	Min. Thickness (mm)	Centering Diameter (mm)	Bolt Hole Circle (mm)	Num. of Holes
240	40	11	9.2	59	98	4+2

ALFA ROMEO

MODEL	START Y.	END Y.
145 (930_)	1994/07	2001/01
146 (930_)	1994/12	2001/10
155 (167_)	1992/01	1997/12
33 (907_)	1990/01	1994/09
33 Sportwagon (907_)	1990/01	1994/09

BRAKE DISC

- Front Axle
- Solid

·OEM Standarts
·AYD Quality
·Safety
·Performance

OE:
92498609
7663466
7645556

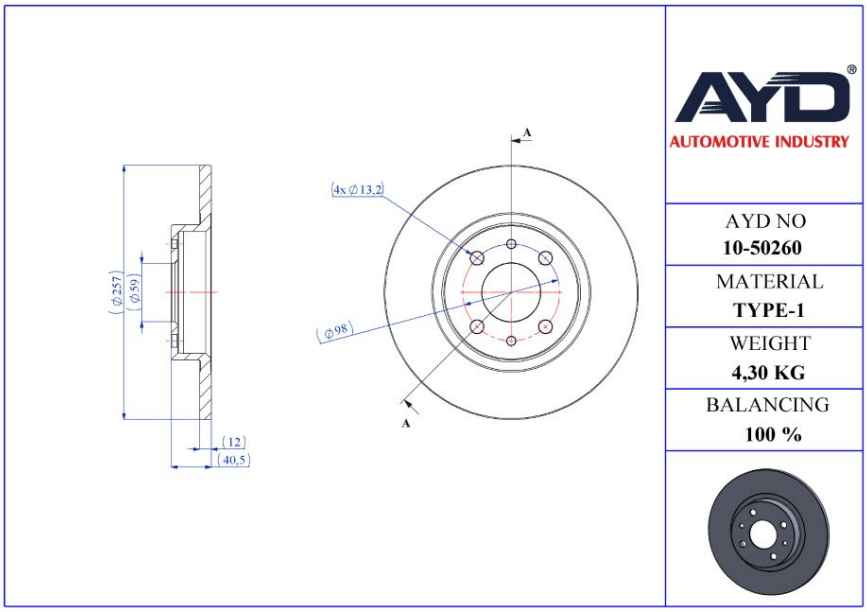

10-50260

Technical Specifications:

Diameter (mm)	Height (mm)	Brake Disc Thickness (mm)	Min. Thickness (mm)	Centering Diameter (mm)	Bolt Hole Circle (mm)	Num. of Holes
257	40.5	12	10.2	59	98	4+2

ALFA ROMEO

MODEL	START Y.	END Y.
145 (930_)	1994/07	2001/01
146 (930_)	1994/12	2001/10

BRAKE DISC

- Front Axle
- Vented

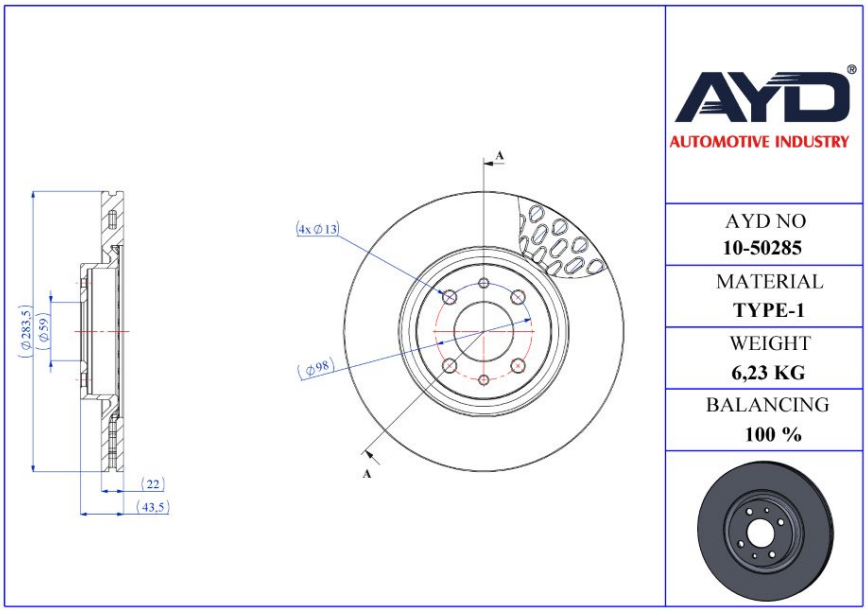

·OEM Standarts
·AYD Quality
·Safety
·Performance

OE:
46403088
82450657
46403959

10-50285

Technical Specifications:

Diameter (mm)	Height (mm)	Brake Disc Thickness (mm)	Min. Thickness (mm)	Centering Diameter (mm)	Bolt Hole Circle (mm)	Num. of Holes
283.5	43.5	22	20.2	59	98	4+2

ALFA ROMEO

MODEL	START Y.	END Y.
155 (167_)	1992/01	1997/12

BRAKE DISC

- Front Axle
- Vented

·OEM Standarts
·AYD Quality
·Safety
·Performance

OE:
5C0615301A
5C0615301D
1K0615301T

10-50154

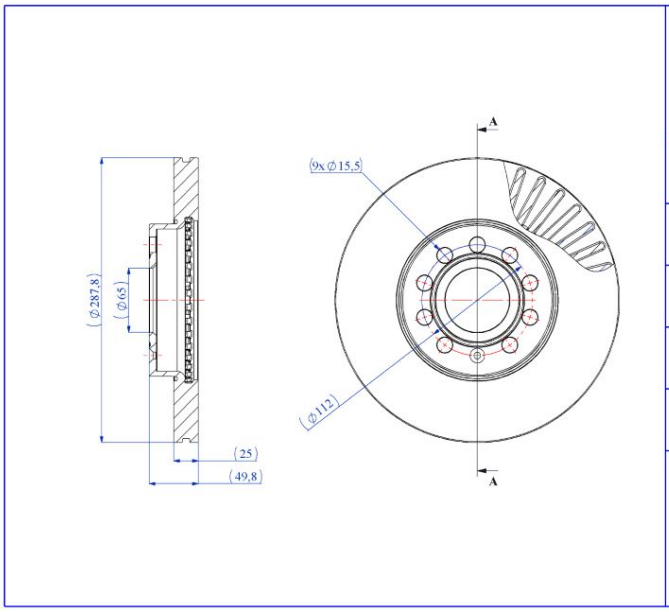

AYD
AUTOMOTIVE INDUSTRY

AYD NO	10-50154
MATERIAL	TYPE-1
WEIGHT	7,44 KG
BALANCING	100 %

Technical Specifications:

Diameter (mm)	Height (mm)	Brake Disc Thickness (mm)	Min. Thickness (mm)	Centering Diameter (mm)	Bolt Hole Circle (mm)	Num. of Holes
287.8	49.8	25	22	65	112	9+1

AUDI

MODEL	START Y.	END Y.
A1 (8X1, 8XK)	2010/05	2018/10
A3 (8P1)	2003/05	2013/12
A3 (8V1, 8VK)	2012/04	
A3 Cabrio (8P7)	2008/04	2013/05
A3 Cabrio (8V7, 8VE)	2013/10	
A3 Limousine (8VS, 8VM)	2013/05	
A3 Sportback (8PA)	2004/09	2015/12
A3 Sportback (8VA, 8VF)	2012/09	

BRAKE DISC

- Rear Axle
- Solid

·OEM Standarts
·AYD Quality
·Safety
·Performance

OE:
5C0615601
5Q0615601F
1K0615601AB

10-50158

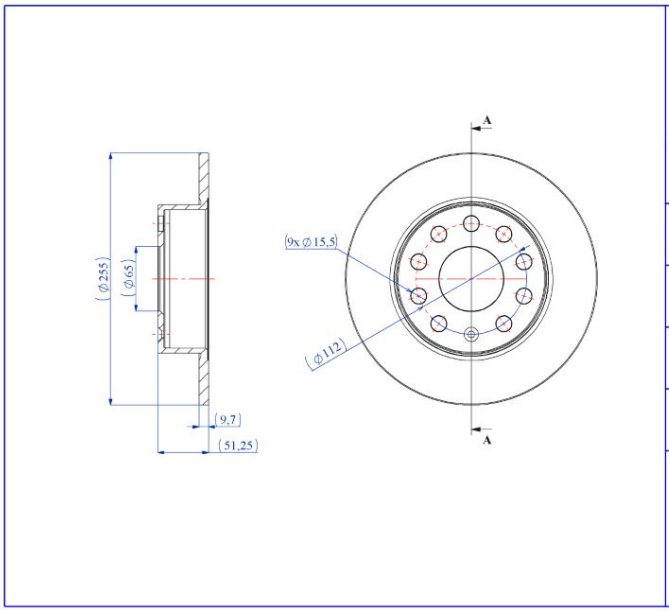

Technical Specifications:

Diameter (mm)	Height (mm)	Brake Disc Thickness (mm)	Min. Thickness (mm)	Centering Diameter (mm)	Bolt Hole Circle (mm)	Num. of Holes
255	51.25	9.7	7	65	112	9+1

AUDI

MODEL	START Y.	END Y.
A3 (8P1)	2003/05	2013/12
A3 Cabrio (8P7)	2008/04	2013/05
A3 Sportback (8PA)	2004/09	2015/12

BRAKE DISC

- Front Axle
- Vented

·OEM Standarts
·AYD Quality
·Safety
·Performance

OE:
5Q0615301F
5C0615301B
JZW615301H

10-50168

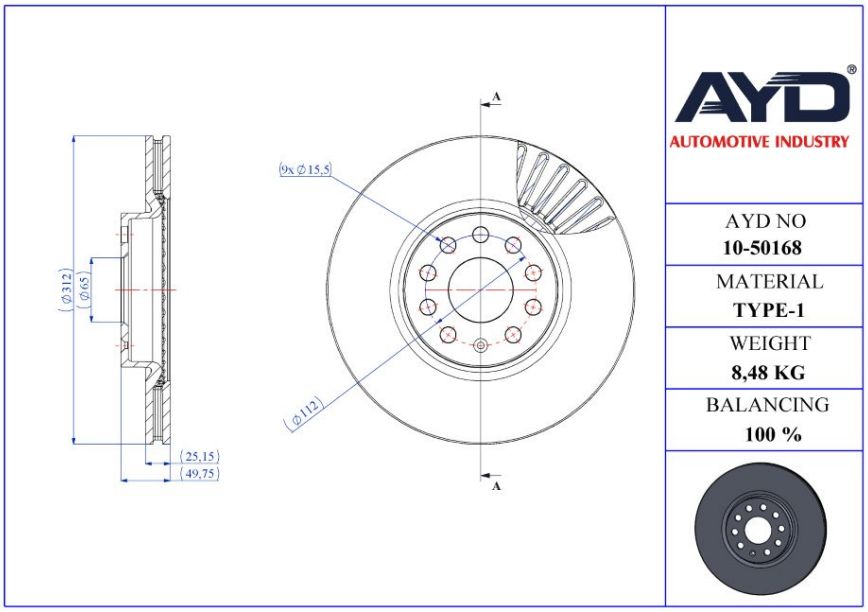

Technical Specifications:

Diameter (mm)	Height (mm)	Brake Disc Thickness (mm)	Min. Thickness (mm)	Centering Diameter (mm)	Bolt Hole Circle (mm)	Num. of Holes
312	49.75	25.15	22	65	112	9+1

AUDI

MODEL	START Y.	END Y.
A1 (8X1, 8XK)	2010/05	2018/10
A1 Sportback (8XA, 8XF)	2011/09	2018/10
A3 (8P1)	2003/05	2013/12
A3 (8V1, 8VK)	2012/04	
A3 Cabrio (8P7)	2008/04	2013/05
A3 Cabrio (8V7, 8VE)	2013/10	
A3 Limousine (8VS, 8VM)	2013/05	
A3 Sportback (8PA)	2004/09	2015/12
A3 Sportback (8VA, 8VF)	2012/09	
Q2 (GAB, GAG)	2016/06	
Q3 (8UB, 8UG)	2011/06	2018/12

BRAKE DISC

- Rear Axle
- Solid

·OEM Standarts
·AYD Quality
·Safety
·Performance

OE:
4A0615301A
4A0615601A

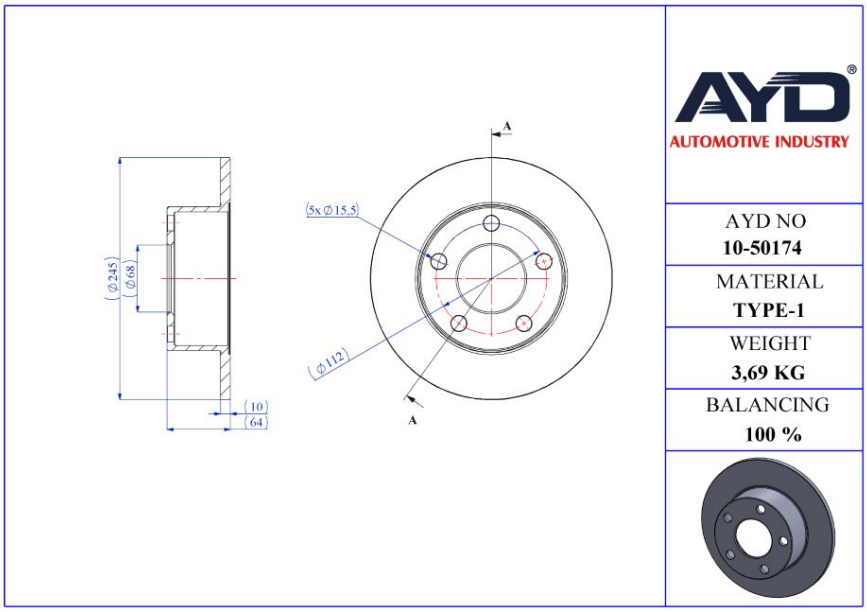

10-50174

Technical Specifications:

Diameter (mm)	Height (mm)	Brake Disc Thickness (mm)	Min. Thickness (mm)	Centering Diameter (mm)	Bolt Hole Circle (mm)	Num. of Holes
245	64	10	8	68	112	5

AUDI

MODEL	START Y.	END Y.
100 C4 Avant (4A5)	1990/12	1994/11
100 C4 Sedan (4A2)	1990/12	1994/07
A6 C4 (4A2)	1994/06	1997/10
A6 C4 Avant (4A5)	1994/06	1997/12
A6 C5 (4B2)	1997/01	2005/12
A6 C5 Avant (4B5)	1997/11	2005/01

BRAKE DISC

- Rear Axle
- Solid

·OEM Standarts
·AYD Quality
·Safety
·Performance

OE:
5898066AA
5098066AA
5098065AA

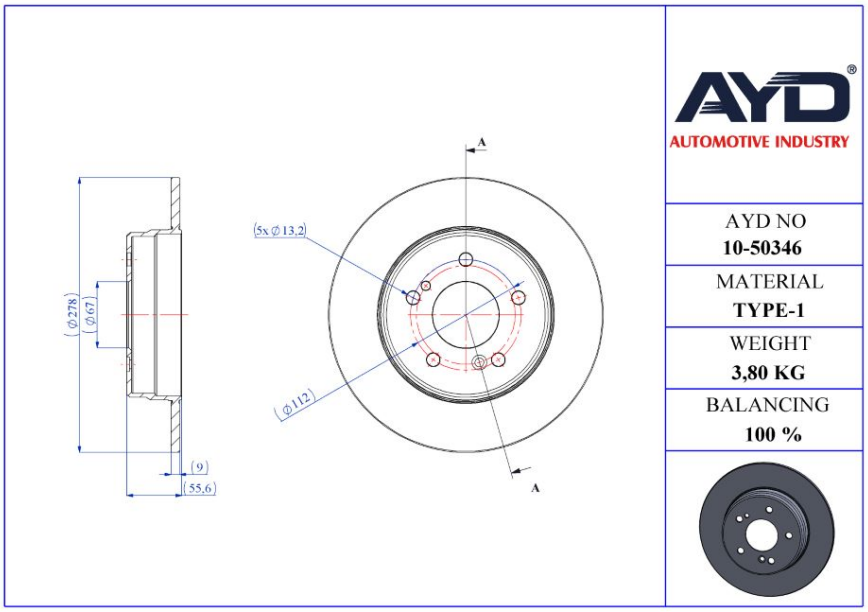

10-50346

Technical Specifications:

Diameter (mm)	Height (mm)	Brake Disc Thickness (mm)	Min. Thickness (mm)	Centering Diameter (mm)	Bolt Hole Circle (mm)	Num. of Holes
278	55.6	9	7.3	67	112	5+2

CHRYSLER

MODEL	START Y.	END Y.
CROSSFIRE	2003/07	2008/12
CROSSFIRE Roadster	2004/05	2008/12

BRAKE DISC

- Rear Axle
- Solid

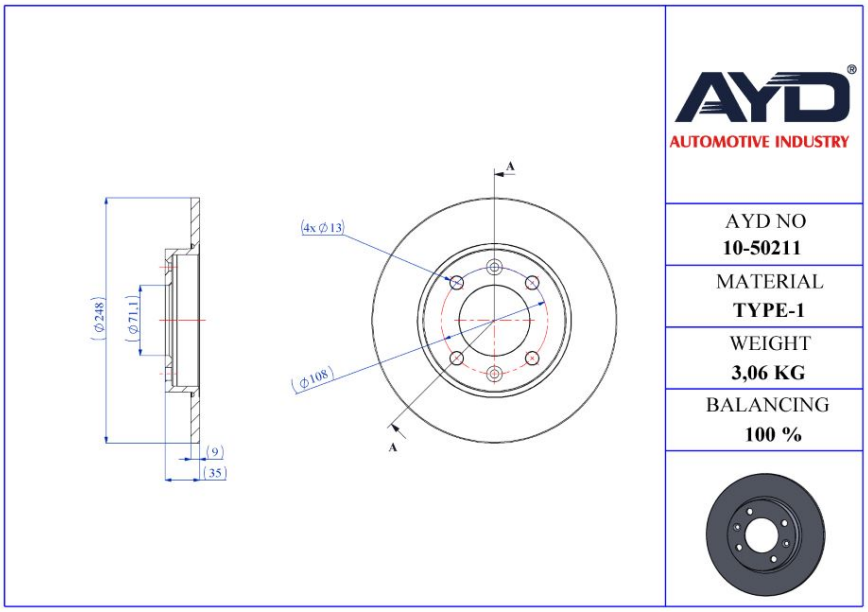

·OEM Standarts
·AYD Quality
·Safety
·Performance

OE:
4246X8
4246XB
424952

10-50211

Technical Specifications:

Diameter (mm)	Height (mm)	Brake Disc Thickness (mm)	Min. Thickness (mm)	Centering Diameter (mm)	Bolt Hole Circle (mm)	Num. of Holes
248	35	9	8	71.1	108	4+2

CITROËN

MODEL	START Y.	END Y.
BERLINGO / BERLINGO FIRST (M_)	1996/07	2011/12
BERLINGO / BERLINGO FIRST MPV (MF_, GJK_,	1996/07	2011/12
BERLINGO MULTISPACE (B9)	2008/04	
C2 (JM_)	2003/07	2017/09
C2 ENTERPRISE (JG_)	2003/11	2009/12
C3 I (FC_, FN_)	2002/02	
C3 Pluriel (HB_)	2003/05	
C4 Coupe (LA_)	2004/11	2013/12
XSARA PICASSO (N68)	1999/09	2012/06

BRAKE DISC

- Front Axle
- Vented

·OEM Standarts
·AYD Quality
·Safety
·Performance

OE:
95517695
424996
95661747

10-50220

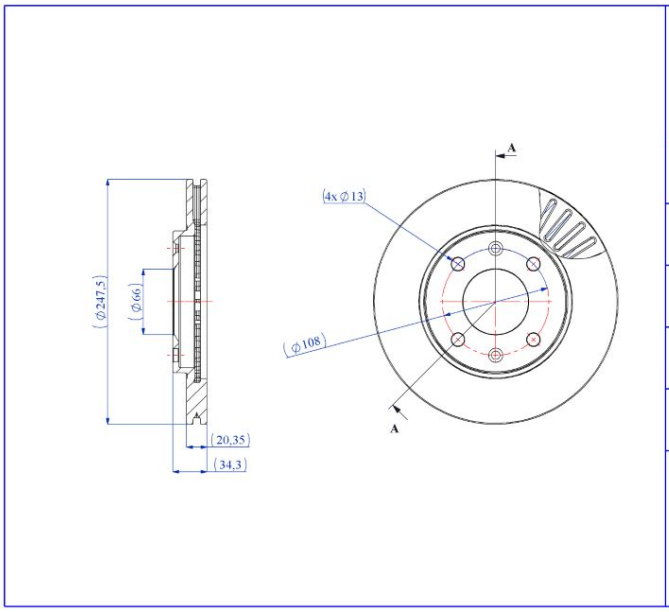

Technical Specifications:

Diameter (mm)	Height (mm)	Brake Disc Thickness (mm)	Min. Thickness (mm)	Centering Diameter (mm)	Bolt Hole Circle (mm)	Num. of Holes
247.5	34.3	20.35	18.5	66	108	4+2

CITROËN

MODEL	START Y.	END Y.
AX (ZA-_)	1986/07	1998/12
SAXO (S0, S1)	1996/02	2004/04
XSARA (N3_)	1998/05	2005/03
XSARA (N1)	1997/04	2005/12
XSARA Break (N2)	1997/10	2010/03
XSARA Coupe (N0)	1998/01	2005/04
XSARA Combi van	1998/05	2005/08
ZX (N2)	1991/03	1999/07
ZX Break (N2)	1993/10	1999/07

BRAKE DISC

- Front Axle
- Solid

·OEM Standarts
·AYD Quality
·Safety
·Performance

OE:
E169014
4246R8
4246R9

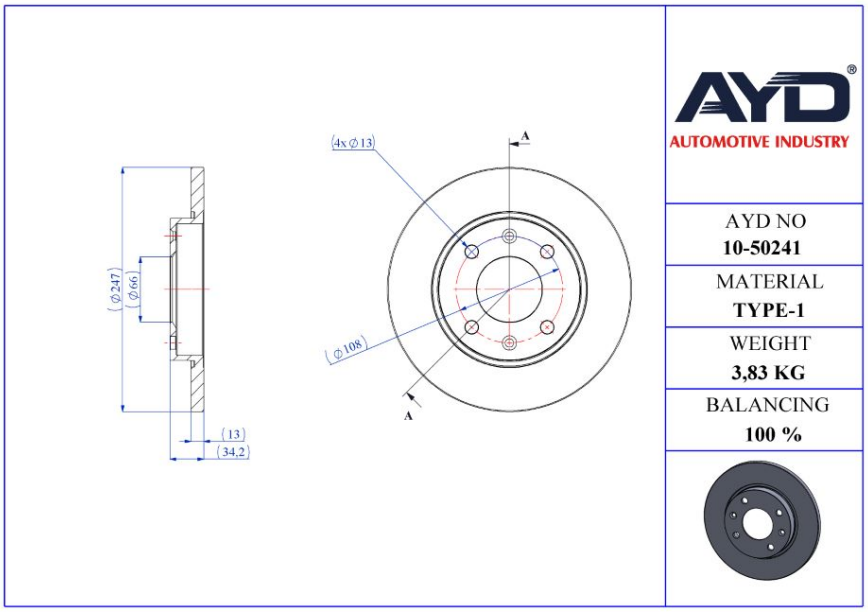

10-50241

Technical Specifications:

Diameter (mm)	Height (mm)	Brake Disc Thickness (mm)	Min. Thickness (mm)	Centering Diameter (mm)	Bolt Hole Circle (mm)	Num. of Holes
247	34.2	13	11	66	108	4+2

CITROËN

MODEL	START Y.	END Y.
XSARA (N3_)	1998/05	2005/03
XSARA (N1)	1997/04	2005/12
XSARA Coupe (N0)	1998/01	2005/04

BRAKE DISC

- Rear Axle
- Solid

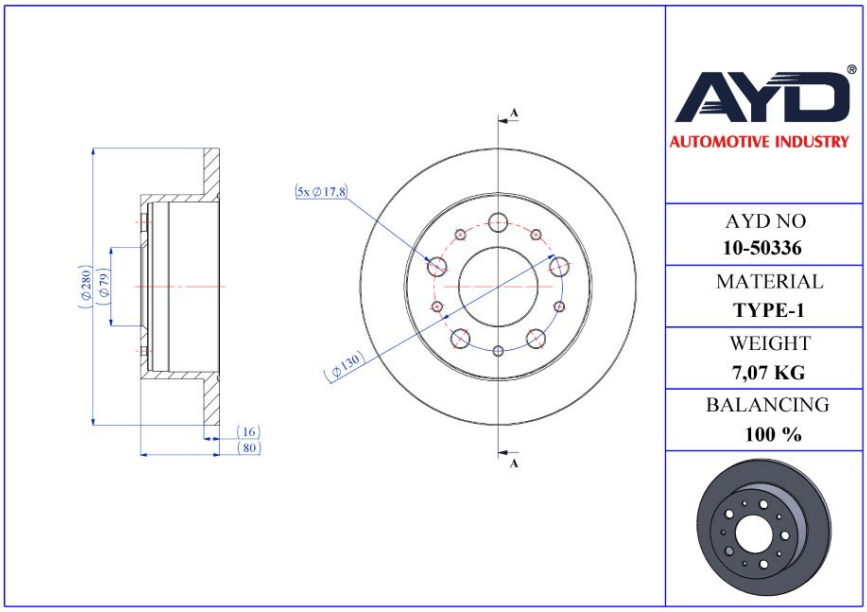

·OEM Standarts
·AYD Quality
·Safety
·Performance

OE:
424939
4249A2
4249K8

10-50336

Technical Specifications:

Diameter (mm)	Height (mm)	Brake Disc Thickness (mm)	Min. Thickness (mm)	Centering Diameter (mm)	Bolt Hole Circle (mm)	Num. of Holes
280	80	16	14.2	79	130	5+5

CITROËN

MODEL	START Y.	END Y.
JUMPER Minibus/Bus	2006/04	
JUMPER Panelvan/Van	2006/04	
JUMPER Platform	2006/04	

BRAKE DISC

- Front Axle
- Vented

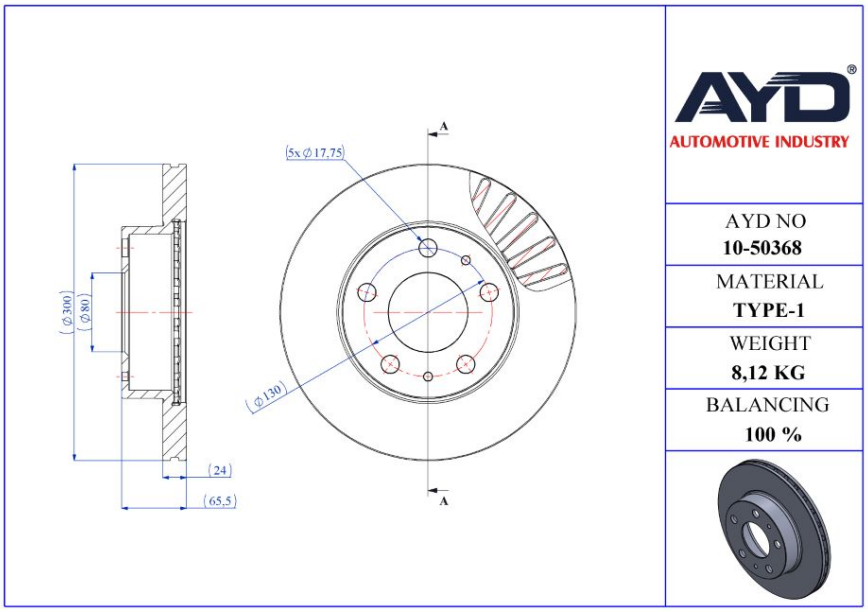

·OEM Standarts
·AYD Quality
·Safety
·Performance

OE:
4246K2

10-50368

Technical Specifications:

Diameter (mm)	Height (mm)	Brake Disc Thickness (mm)	Min. Thickness (mm)	Centering Diameter (mm)	Bolt Hole Circle (mm)	Num. of Holes
300	65.5	24	21.9	80	130	5+2

CITROËN

MODEL	START Y.	END Y.
JUMPER Minibus/Bus	2006/04	
JUMPER Minibus/Bus (230P)	1994/02	2002/04
JUMPER Minibus/Bus (244, Z_)	2002/04	
JUMPER Panelvan/Van	2006/04	
JUMPER Panelvan/Van (230L)	1994/02	2002/08
JUMPER Panelvan/Van (244)	2002/04	
JUMPER Platform	2006/04	
JUMPER Platform (230)	1994/03	2002/04
JUMPER Platform (244)	2002/02	

BRAKE DISC

- Front Axle
- Vented

·OEM Standarts
·AYD Quality
·Safety
·Performance

OE:
7701207829

10-50178

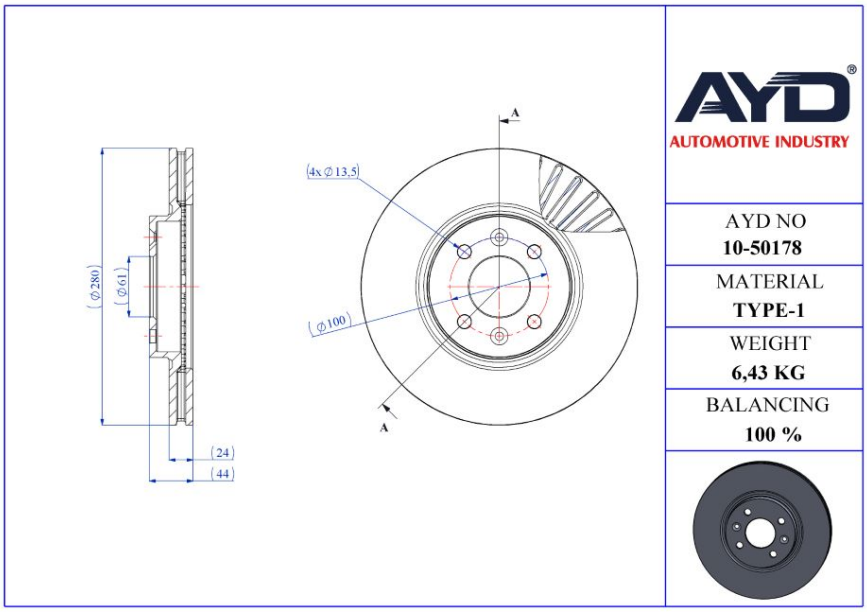

Technical Specifications:

Diameter (mm)	Height (mm)	Brake Disc Thickness (mm)	Min. Thickness (mm)	Centering Diameter (mm)	Bolt Hole Circle (mm)	Num. of Holes
280	44	24	21.8	61	100	4+2

DACIA

MODEL	START Y.	END Y.
DOKKER Express	2012/11	
DOKKER MPV (KE_)	2012/11	
DOKKER Pick-up	2018/07	
LODGY (JS_)	2012/03	

BRAKE DISC

- Front Axle
- Vented

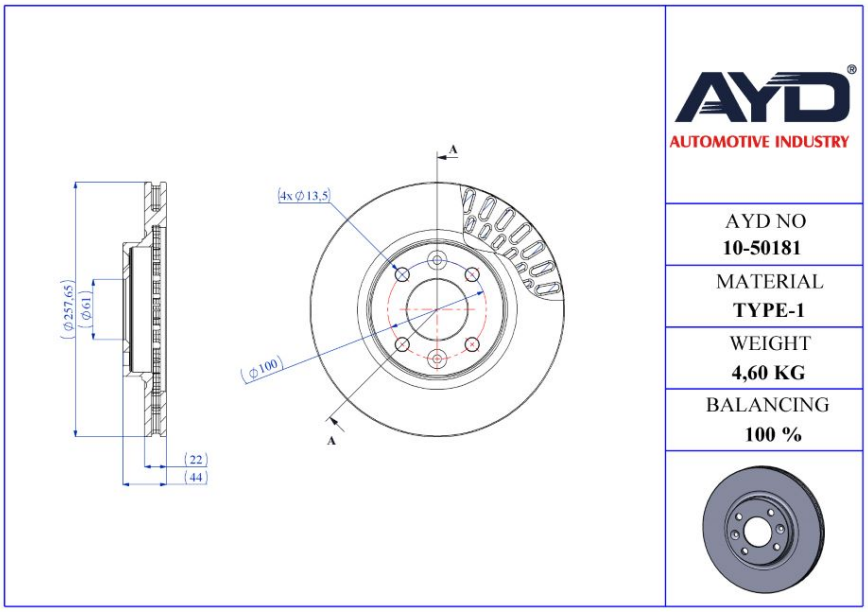

·OEM Standarts
·AYD Quality
·Safety
·Performance

OE:
402063149R
402062212R
40 20 670 25R

10-50181

Technical Specifications:

Diameter (mm)	Height (mm)	Brake Disc Thickness (mm)	Min. Thickness (mm)	Centering Diameter (mm)	Bolt Hole Circle (mm)	Num. of Holes
257.7	44	22	19.8	61	100	4+2

DACIA

MODEL	START Y.	END Y.
LOGAN II	2012/10	
LOGAN MCV II	2013/02	
SANDERO II	2012/10	

BRAKE DISC

- Front Axle
- Vented

·OEM Standarts
·AYD Quality
·Safety
·Performance

OE:
402060540R

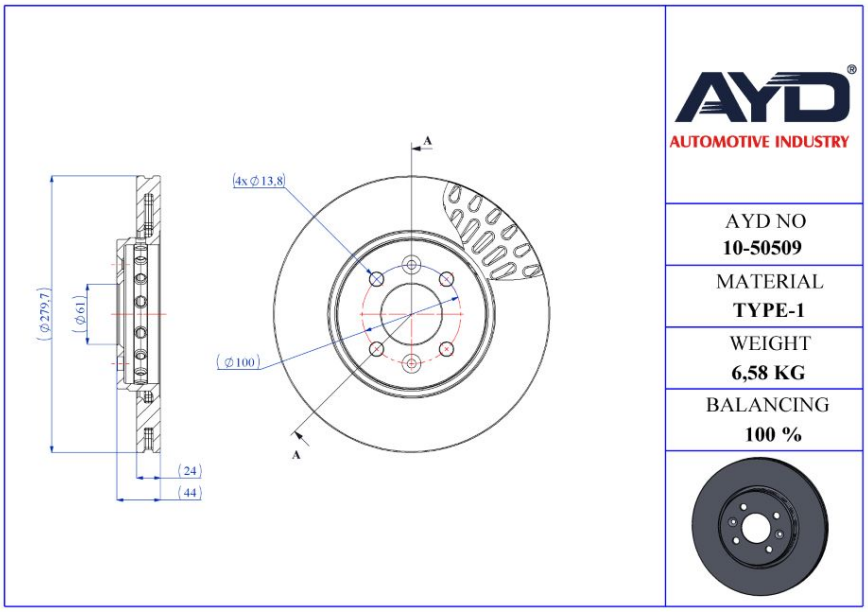

10-50509

Technical Specifications:

Diameter (mm)	Height (mm)	Brake Disc Thickness (mm)	Min. Thickness (mm)	Centering Diameter (mm)	Bolt Hole Circle (mm)	Num. of Holes
279.7	44	24	21.8	61	100	4+2

DACIA

MODEL	START Y.	END Y.
DOKKER Express	2012/11	
DOKKER MPV (KE_)	2012/11	
DOKKER Pick-up	2018/07	
LODGY (JS_)	2012/03	

BRAKE DISC

- Front Axle
- Vented

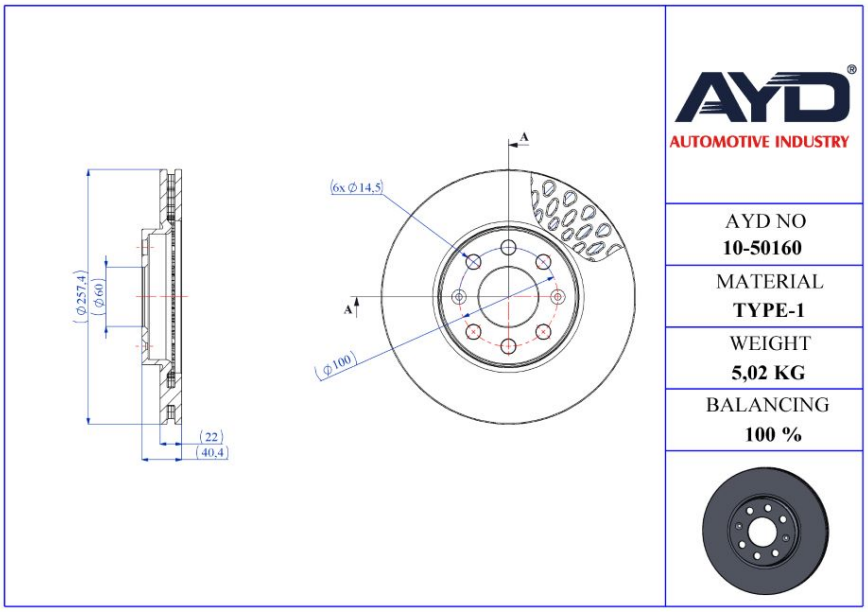

·OEM Standarts
·AYD Quality
·Safety
·Performance

OE:
55700921
55700920

10-50160

Technical Specifications:

Diameter (mm)	Height (mm)	Brake Disc Thickness (mm)	Min. Thickness (mm)	Centering Diameter (mm)	Bolt Hole Circle (mm)	Num. of Holes
257.4	40.4	22	20	60	100	6+2

FIAT

MODEL	START Y.	END Y.
GRANDE PUNTO (199_)	2005/06	
GRANDE PUNTO Van (199_)	2005/10	2013/06
PUNTO (199_)	2008/04	
PUNTO (199_)	2012/01	
PUNTO EVO (199_)	2009/03	2012/02
PUNTO EVO (199_)	2008/07	

BRAKE DISC

- Front Axle
- Rear Axle
- Solid

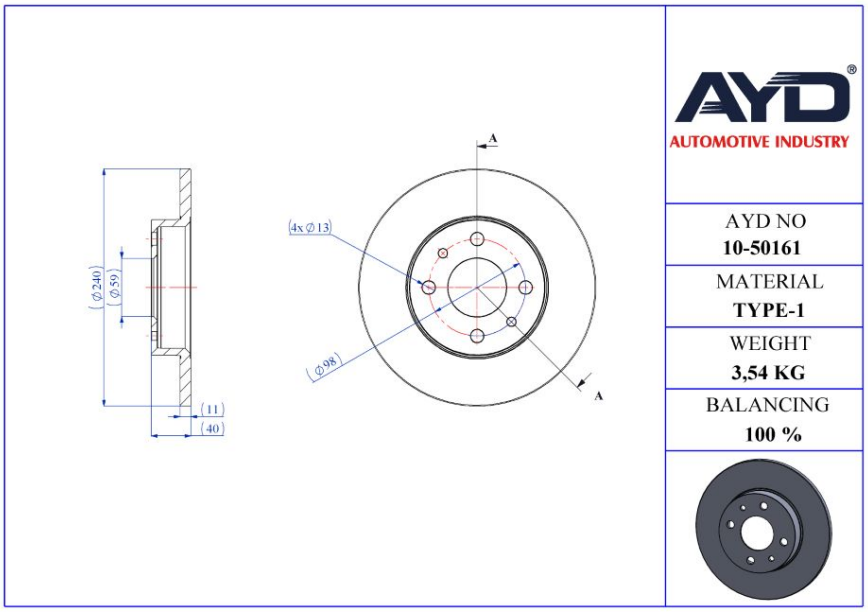

·OEM Standarts
·AYD Quality
·Safety
·Performance

OE:
51859078
60576335
60805117

10-50161

Technical Specifications:

Diameter (mm)	Height (mm)	Brake Disc Thickness (mm)	Min. Thickness (mm)	Centering Diameter (mm)	Bolt Hole Circle (mm)	Num. of Holes
240	40	11	9.2	59	98	4+2

FIAT

MODEL	START Y.	END Y.
500 (312_)	2007/07	
500 C (312_)	2009/09	
BARCHETTA (183_)	1995/03	2005/05
BRAVO I (182_)	1995/10	2001/10
CINQUECENTO (170_)	1991/07	1999/07
CINQUECENTO VAN (170_)	1991/07	1998/02
COUPE (175_)	1993/11	2000/08
IDEA (350_)	2003/12	
MAREA (185_)	1996/05	2007/12
MAREA Weekend (185_)	1996/09	2007/12
PANDA (169_)	2004/03	

BRAKE DISC

- Front Axle
- Solid

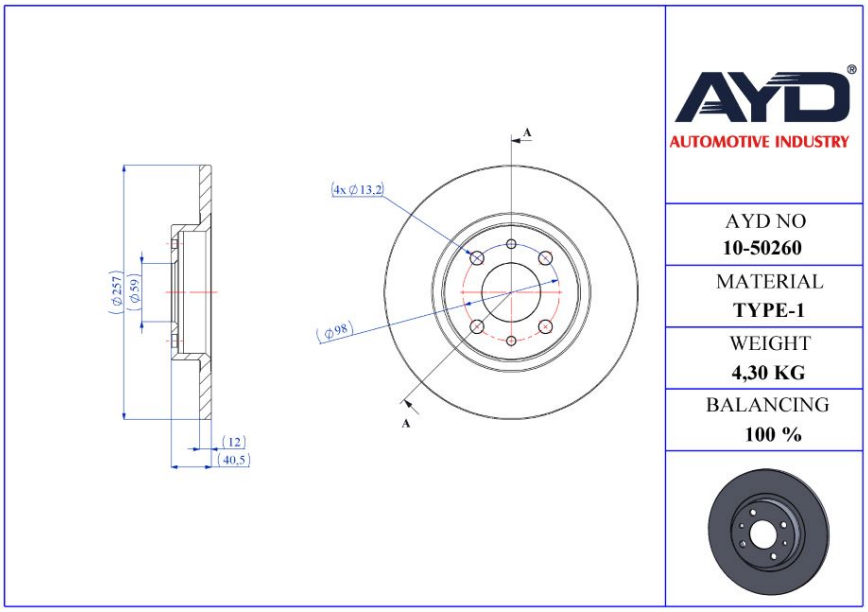

·OEM Standarts
·AYD Quality
·Safety
·Performance

OE:
46820655

10-50260

Technical Specifications:

Diameter (mm)	Height (mm)	Brake Disc Thickness (mm)	Min. Thickness (mm)	Centering Diameter (mm)	Bolt Hole Circle (mm)	Num. of Holes
257	40.5	12	10.2	59	98	4+2

FIAT

MODEL	START Y.	END Y.
500 (312_)	2007/07	
500 C (312_)	2009/09	
BRAVA (182_)	1995/10	2003/06
BRAVO I (182_)	1995/10	2001/10
MAREA (185_)	1996/05	2007/12
MAREA Weekend (185_)	1996/09	2007/12
PANDA (312_, 319_)	2012/02	
PANDA VAN (312_, 519_)	2012/02	
PUNTO (188_)	2000/02	2010/12
PUNTO (176_)	1993/09	1999/09
PUNTO (188_)	1999/09	2012/07

BRAKE DISC

- Front Axle
- Vented

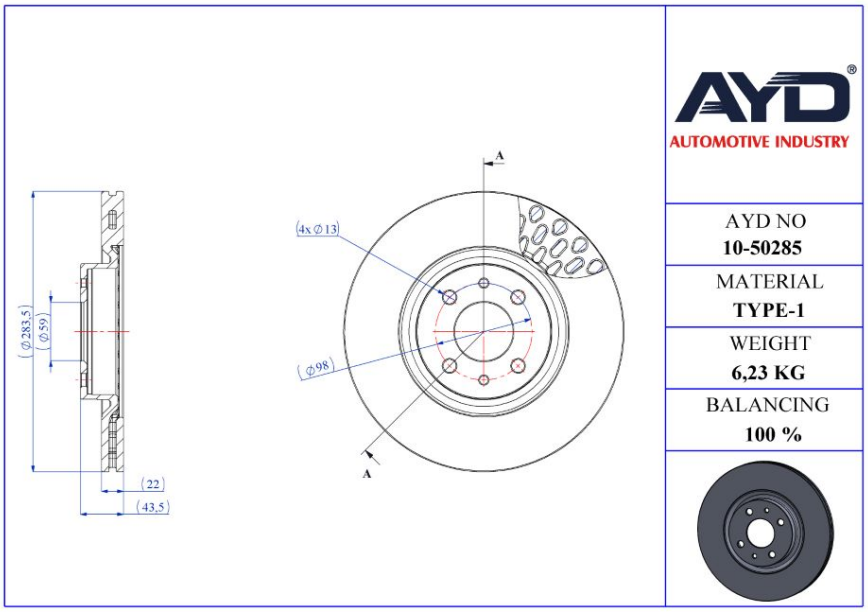

·OEM Standarts
·AYD Quality
·Safety
·Performance

OE:
46445004
46448168
46455892

10-50285

Technical Specifications:

Diameter (mm)	Height (mm)	Brake Disc Thickness (mm)	Min. Thickness (mm)	Centering Diameter (mm)	Bolt Hole Circle (mm)	Num. of Holes
283.5	43.5	22	20.2	59	98	4+2

FIAT

MODEL	START Y.	END Y.
BRAVO I (182_)	1995/10	2001/10
BRAVO II (198_)	2006/11	
CROMA (154_)	1985/12	1996/12
DOBLO (223_)	2000/11	
DOBLO MPV (119_, 223_)	2001/03	
IDEA (350_)	2003/12	
LINEA (323_, 110_)	2006/10	
MAREA (185_)	1996/05	2007/12
MAREA Weekend (185_)	1996/09	2007/12
STILO (192_)	2001/10	2010/11
STILO Multi Wagon (192_)	2003/01	2008/08

BRAKE DISC

- Rear Axle
- Solid

·OEM Standarts
·AYD Quality
·Safety
·Performance

OE:
51749275

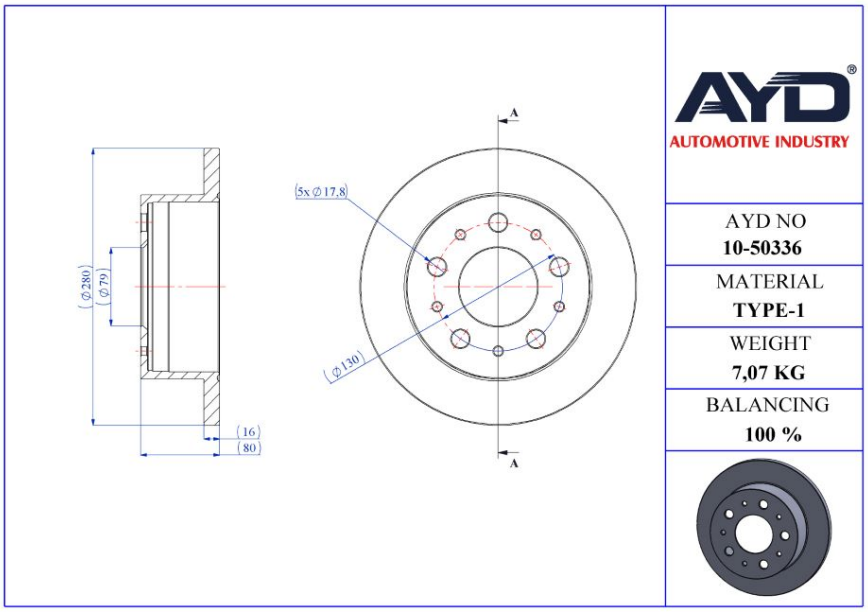

10-50336

Technical Specifications:

Diameter (mm)	Height (mm)	Brake Disc Thickness (mm)	Min. Thickness (mm)	Centering Diameter (mm)	Bolt Hole Circle (mm)	Num. of Holes
280	80	16	14.2	79	130	5+5

FIAT

MODEL	START Y.	END Y.
DUCATO Minibus/Bus (250_, 290_)	2006/07	
DUCATO Panelvan/Van (250_, 290_)	2006/07	
DUCATO Platform (250_, 290_)	2006/07	

BRAKE DISC

- Front Axle
- Vented

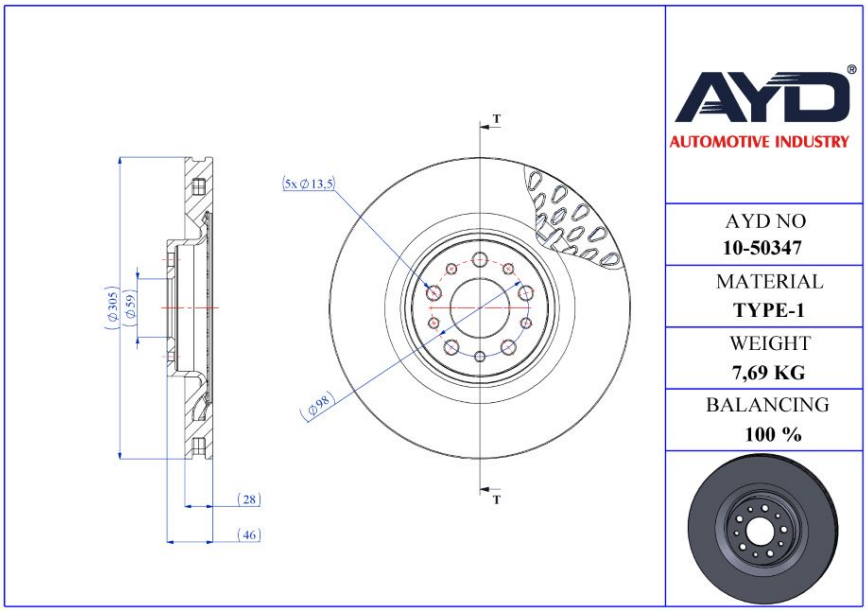

·OEM Standarts
·AYD Quality
·Safety
·Performance

OE:
51897455
51854567
51914663

10-50347

Technical Specifications:

Diameter (mm)	Height (mm)	Brake Disc Thickness (mm)	Min. Thickness (mm)	Centering Diameter (mm)	Bolt Hole Circle (mm)	Num. of Holes
305	46	28	26	59	98	5+5

FIAT

MODEL	START Y.	END Y.
500L (351_, 352_)	2012/09	
DOBLO Cargo (263_)	2010/02	
DOBLO Minibus/Bus (263_)	2009/11	
DOBLO Platform (263_)	2010/02	

BRAKE DISC

- Front Axle
- Vented

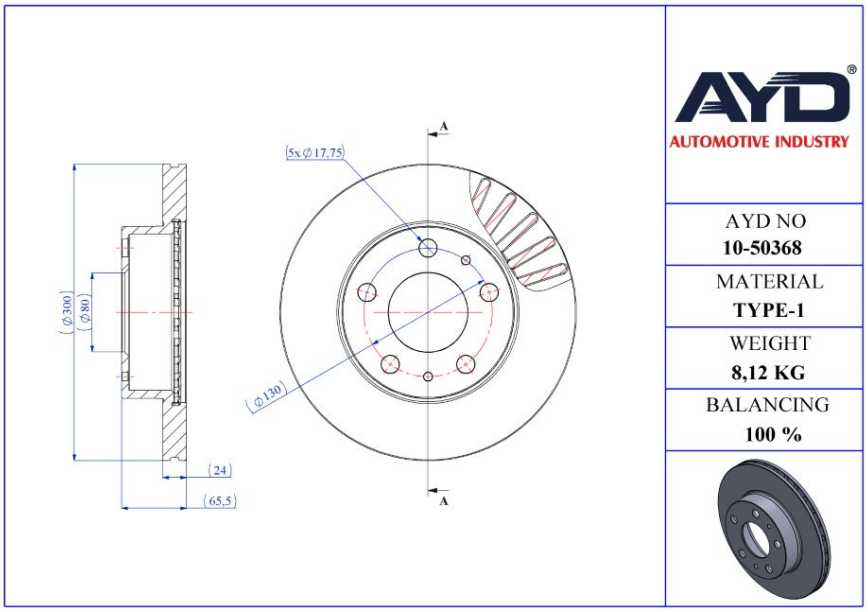

·OEM Standarts
·AYD Quality
·Safety
·Performance

OE:
46806234

10-50368

Technical Specifications:

Diameter (mm)	Height (mm)	Brake Disc Thickness (mm)	Min. Thickness (mm)	Centering Diameter (mm)	Bolt Hole Circle (mm)	Num. of Holes
300	65.5	24	21.9	80	130	5+2

FIAT

MODEL	START Y.	END Y.
DUCATO Minibus/Bus (230_)	1994/03	2005/05
DUCATO Minibus/Bus (244_)	2002/04	
DUCATO Minibus/Bus (250_, 290_)	2006/07	
DUCATO Panelvan/Van (230_)	1994/03	2005/05
DUCATO Panelvan/Van (244_)	2002/04	
DUCATO Panelvan/Van (250_, 290_)	2006/07	
DUCATO Platform (230_)	1994/03	2002/04
DUCATO Platform (244_)	2002/04	
DUCATO Platform (250_, 290_)	2006/07	

BRAKE DISC

- Front Axle
- Vented

·OEM Standarts
·AYD Quality
·Safety
·Performance

OE:
46419204

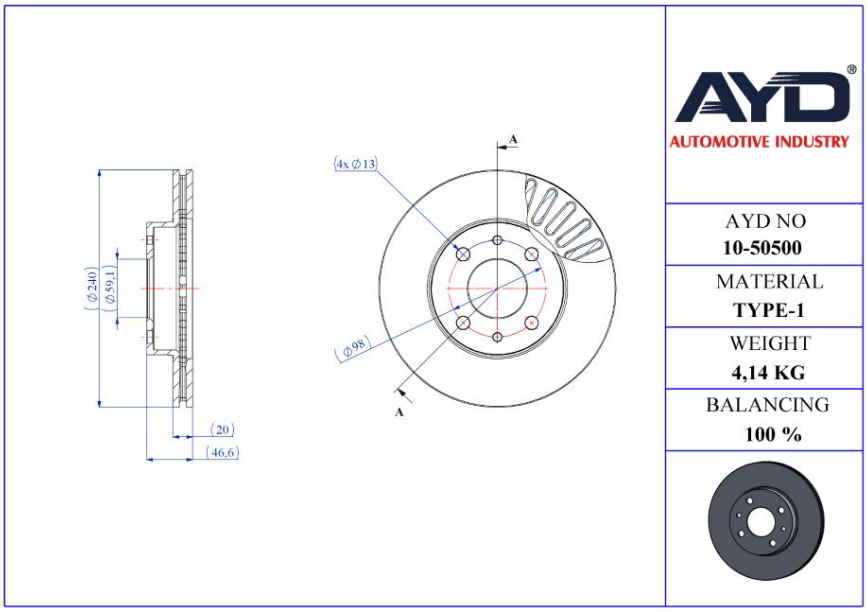

10-50500

Technical Specifications:

Diameter (mm)	Height (mm)	Brake Disc Thickness (mm)	Min. Thickness (mm)	Centering Diameter (mm)	Bolt Hole Circle (mm)	Num. of Holes
240	46.6	20	18.2	59.1	98	4+2

FIAT

MODEL	START Y.	END Y.
PALIO (178_)	1996/04	
PALIO Weekend (178_, 173_, 373_, 374_, 171_)	1996/04	
SIENA (178_, 172_)	1996/04	2016/12

BRAKE DISC

- Front Axle
- Rear Axle
- Solid

·OEM Standarts
·AYD Quality
·Safety
·Performance

OE:
9S511125CA
BS51 1125-AA
1541802

10-50161

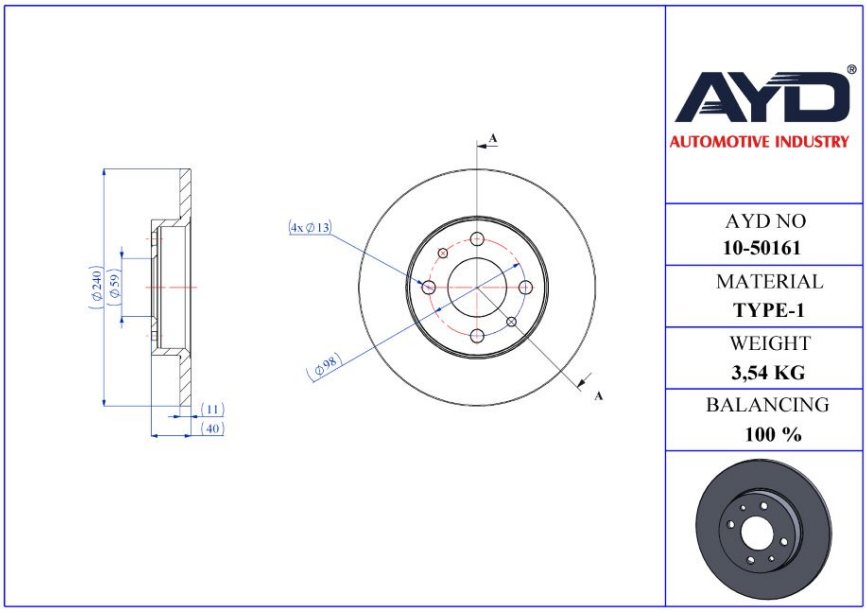

Technical Specifications:

Diameter (mm)	Height (mm)	Brake Disc Thickness (mm)	Min. Thickness (mm)	Centering Diameter (mm)	Bolt Hole Circle (mm)	Num. of Holes
240	40	11	9.2	59	98	4+2

FORD

MODEL	START Y.	END Y.
KA (RU8)	2008/10	2016/05

BRAKE DISC

- Front Axle
- Vented

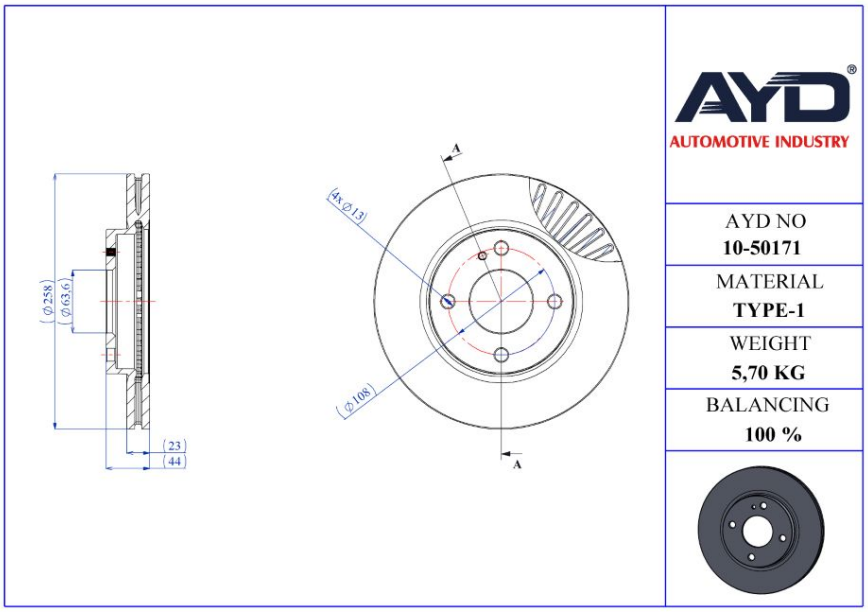

·OEM Standarts
·AYD Quality
·Safety
·Performance

OE:
8V511125AB
8V511125AD
8V511125AC

10-50171

Technical Specifications:

Diameter (mm)	Height (mm)	Brake Disc Thickness (mm)	Min. Thickness (mm)	Centering Diameter (mm)	Bolt Hole Circle (mm)	Num. of Holes
258	44	23	21	63.6	108	4+1

FORD

MODEL	START Y.	END Y.
FIESTA Sedan	2010/04	
FIESTA VI (CB1, CCN)	2008/06	
FIESTA VI Van	2008/08	
KA+ III (UK, FK)	2014/08	

BRAKE DISC

- Rear Axle
- Solid

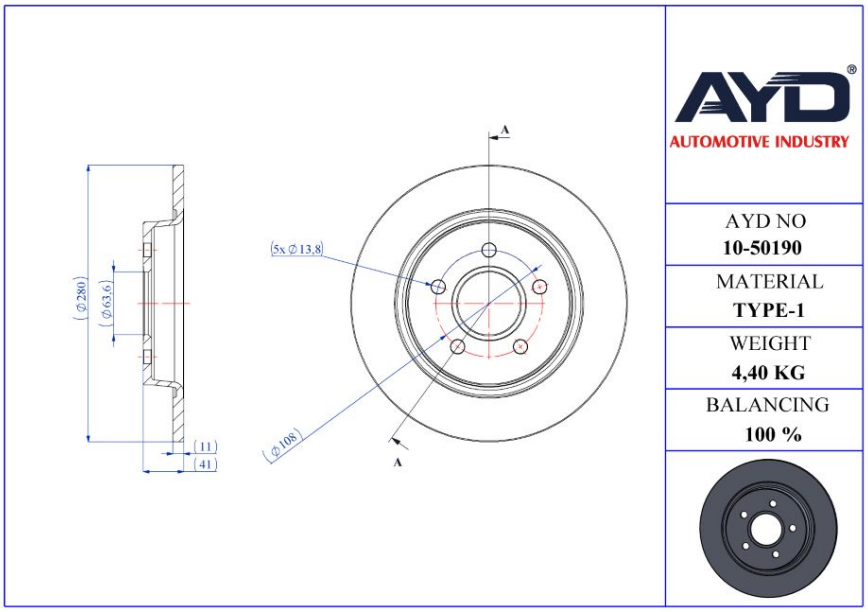

·OEM Standarts
·AYD Quality
·Safety
·Performance

OE:
1469081
3M512A315DB
3M512A315ED

10-50190

Technical Specifications:

Diameter (mm)	Height (mm)	Brake Disc Thickness (mm)	Min. Thickness (mm)	Centering Diameter (mm)	Bolt Hole Circle (mm)	Num. of Holes
280	41	11	9	63.6	108	5

FORD

MODEL	START Y.	END Y.
C-MAX (DM2)	2007/02	2010/09
FOCUS C-MAX (DM2)	2003/10	2007/03
FOCUS II (DA_, HCP, DP)	2004/07	2013/09
FOCUS II Cabrio	2006/10	2010/09
FOCUS II Combi van	2004/07	2011/07
FOCUS II Sedan (DB_, FCH, DH)	2005/04	
FOCUS II Turnier (DA_, FFS, DS)	2004/07	2012/09

BRAKE DISC

- Rear Axle
- Solid

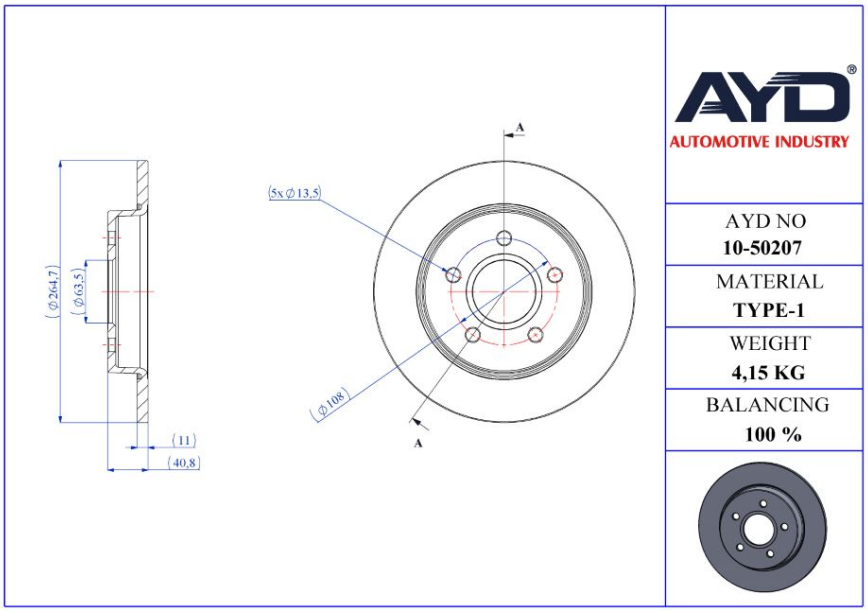

·OEM Standarts
·AYD Quality
·Safety
·Performance

OE:
1223540
1468946
1377360

10-50207

Technical Specifications:

Diameter (mm)	Height (mm)	Brake Disc Thickness (mm)	Min. Thickness (mm)	Centering Diameter (mm)	Bolt Hole Circle (mm)	Num. of Holes
264.7	40.8	11	9	63.5	108	5

FORD

MODEL	START Y.	END Y.
C-MAX (DM2)	2007/02	2010/09
FOCUS C-MAX (DM2)	2003/10	2007/03
FOCUS II (DA_, HCP, DP)	2004/07	2013/09
FOCUS II Combi van	2004/07	2011/07
FOCUS II Sedan (DB_, FCH, DH)	2005/04	
FOCUS II Turnier (DA_, FFS, DS)	2004/07	2012/09

BRAKE DISC

- Front Axle
- Vented

·OEM Standarts
·AYD Quality
·Safety
·Performance

OE:
1361298
4367104
4367106

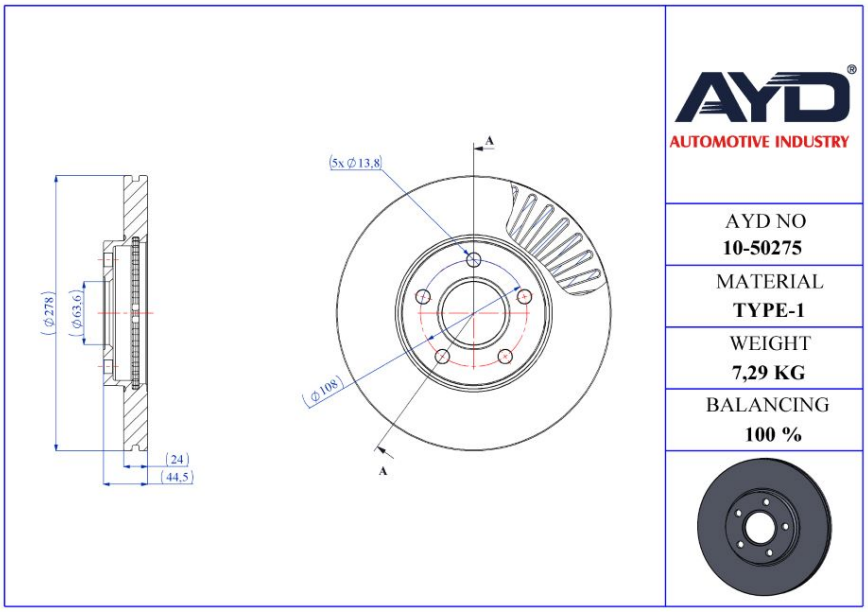

10-50275

Technical Specifications:

Diameter (mm)	Height (mm)	Brake Disc Thickness (mm)	Min. Thickness (mm)	Centering Diameter (mm)	Bolt Hole Circle (mm)	Num. of Holes
278	44.5	24	22	63.6	108	5

FORD

MODEL	START Y.	END Y.
TOURNEO CONNECT	2002/06	2013/12
TRANSIT CONNECT (P65_, P70_, P80_)	2002/06	

BRAKE DISC

- Front Axle
- Vented

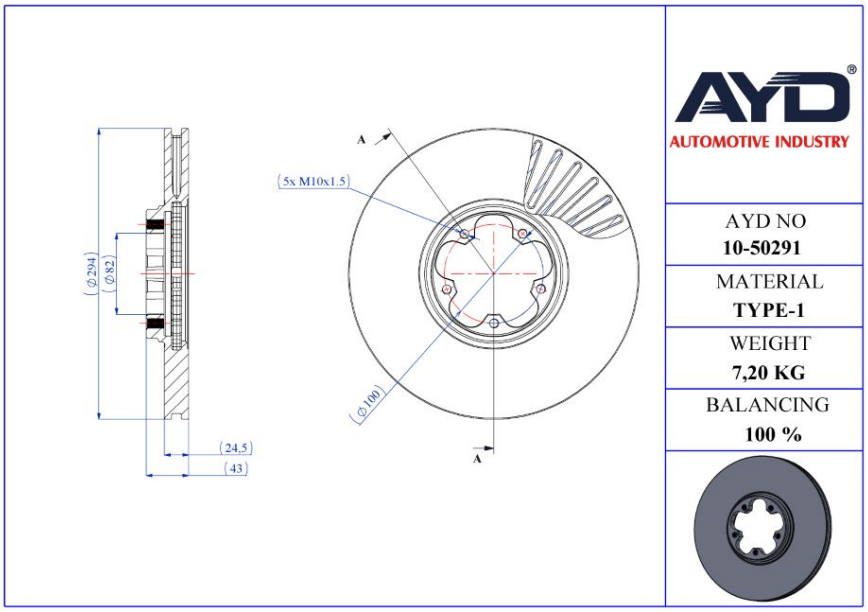

·OEM Standarts
·AYD Quality
·Safety
·Performance

OE:
1568640
4041428
2256041

10-50291

Technical Specifications:

Diameter (mm)	Height (mm)	Brake Disc Thickness (mm)	Min. Thickness (mm)	Centering Diameter (mm)	Bolt Hole Circle (mm)	Num. of Holes
294	43	24.5	22.1	82	100	5

FORD

MODEL	START Y.	END Y.
TRANSIT Minibus/Bus (FD_ _, FB_ _, FS_ _, FZ_ _,	2000/01	2006/05
TRANSIT Panelvan/Van (FA_ _)	2000/01	2006/05
TRANSIT Platform (FM_ _, FN_ _)	2000/01	2006/05

BRAKE DISC

- Front Axle
- Vented

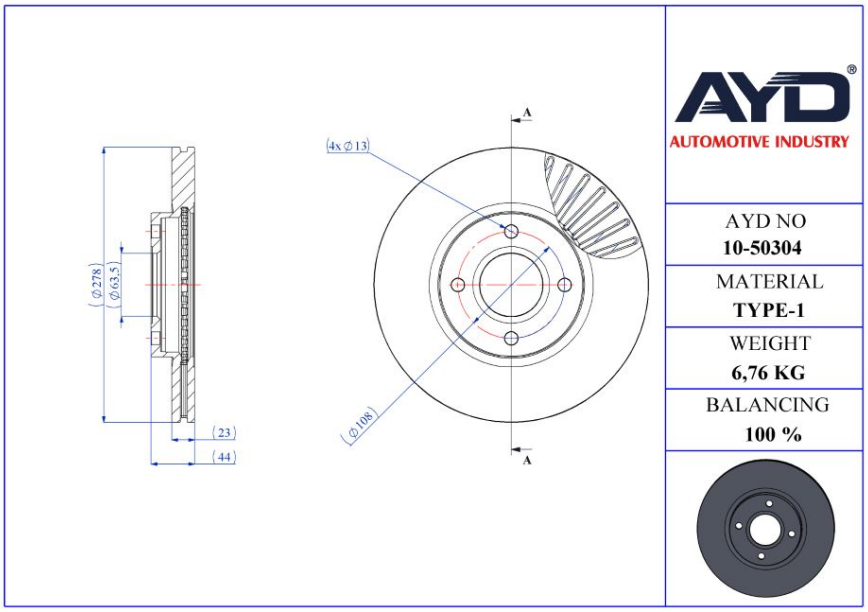

·OEM Standarts
·AYD Quality
·Safety
·Performance

OE:
1751584
EY161125AA

10-50304

Technical Specifications:

Diameter (mm)	Height (mm)	Brake Disc Thickness (mm)	Min. Thickness (mm)	Centering Diameter (mm)	Bolt Hole Circle (mm)	Num. of Holes
278	44	23	21	63.5	108	4

FORD

MODEL	START Y.	END Y.
B-MAX (JK)	2012/10	
B-MAX Van (JK)	2012/08	
FIESTA Sedan	2010/04	
FIESTA VI (CB1, CCN)	2008/06	
FIESTA VI Van	2008/08	
TRANSIT COURIER B460	2014/02	
TRANSIT COURIER B460 MPV	2014/02	

BRAKE DISC

- Rear Axle
- Solid

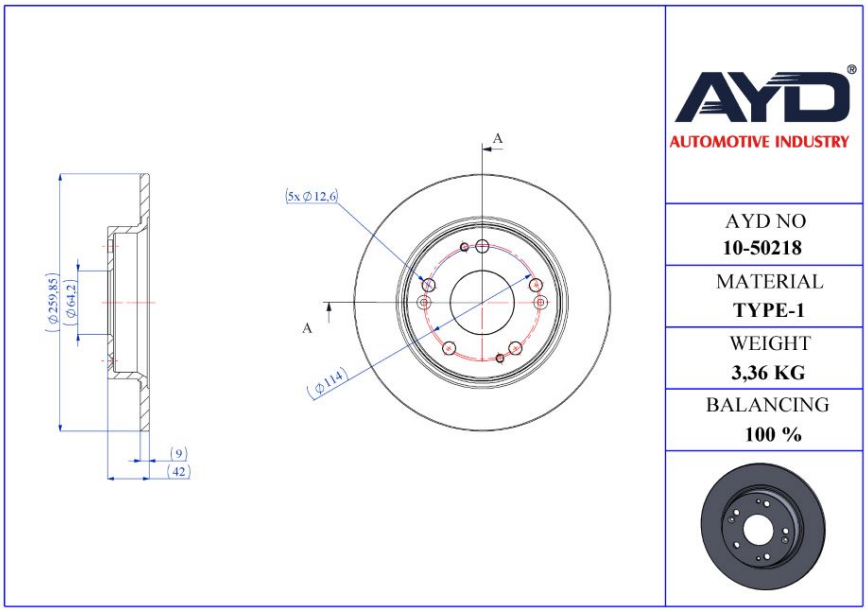

·OEM Standarts
·AYD Quality
·Safety
·Performance

OE:
42510SMGE20
42510SNAA01
42510SNEA00

10-50218

Technical Specifications:

Diameter (mm)	Height (mm)	Brake Disc Thickness (mm)	Min. Thickness (mm)	Centering Diameter (mm)	Bolt Hole Circle (mm)	Num. of Holes
259.85	42	9	8	64.2	114	5+4

HONDA

MODEL	START Y.	END Y.
CIVIC Coupe	2005/09	2011/12
CIVIC IX Sedan (FB)	2011/09	
CIVIC VIII Hatchback (FN, FK)	2005/09	
CIVIC VIII Sedan (FD, FA)	2005/09	

BRAKE DISC

- Rear Axle
- Solid

·OEM Standarts
·AYD Quality
·Safety
·Performance

OE:
584111H300
584111H100

10-50173

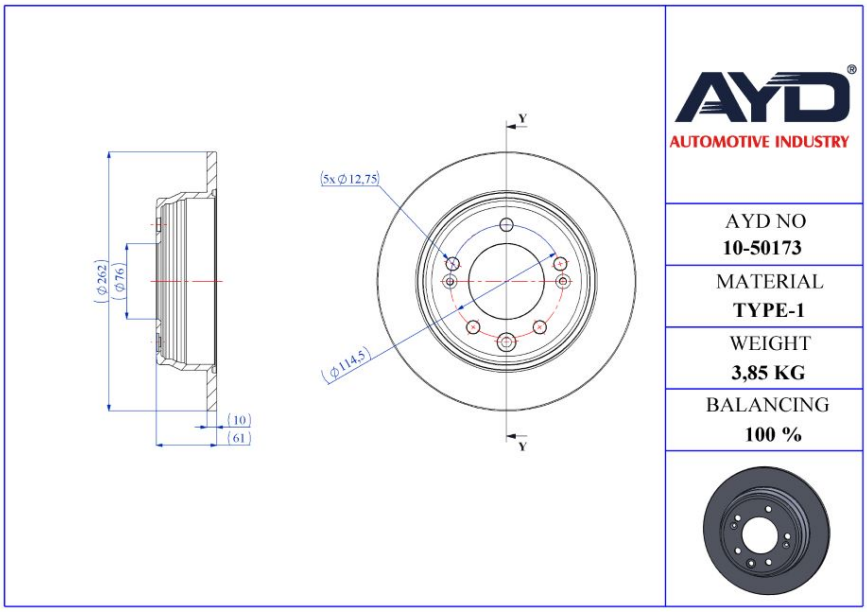

Technical Specifications:

Diameter (mm)	Height (mm)	Brake Disc Thickness (mm)	Min. Thickness (mm)	Centering Diameter (mm)	Bolt Hole Circle (mm)	Num. of Holes
262	61	10	8.4	76	114.5	5+3

HYUNDAI

MODEL	START Y.	END Y.
i30 (FD)	2007/10	2012/05
i30 (GD)	2011/06	
i30 Station wagon (FD)	2007/10	2012/06
ix35 (LM, EL, ELH)	2009/08	

BRAKE DISC

- Rear Axle
- Solid

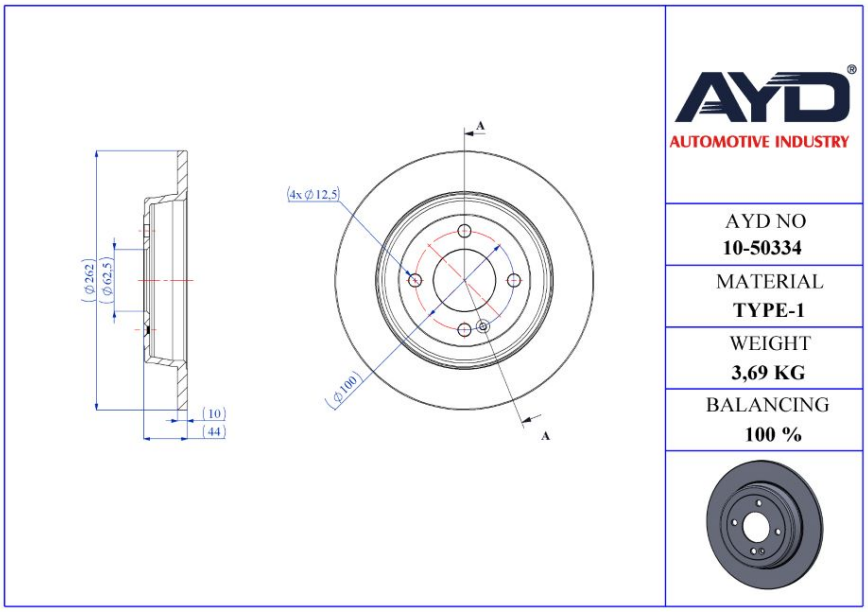

·OEM Standarts
·AYD Quality
·Safety
·Performance

OE:
584110U300

10-50334

Technical Specifications:

Diameter (mm)	Height (mm)	Brake Disc Thickness (mm)	Min. Thickness (mm)	Centering Diameter (mm)	Bolt Hole Circle (mm)	Num. of Holes
262	44	10	8.4	62.5	100	4+1

HYUNDAI

MODEL	START Y.	END Y.
ACCENT IV (RB)	2010/11	
i20 II (GB, IB)	2014/11	

BRAKE DISC

- Rear Axle
- Solid

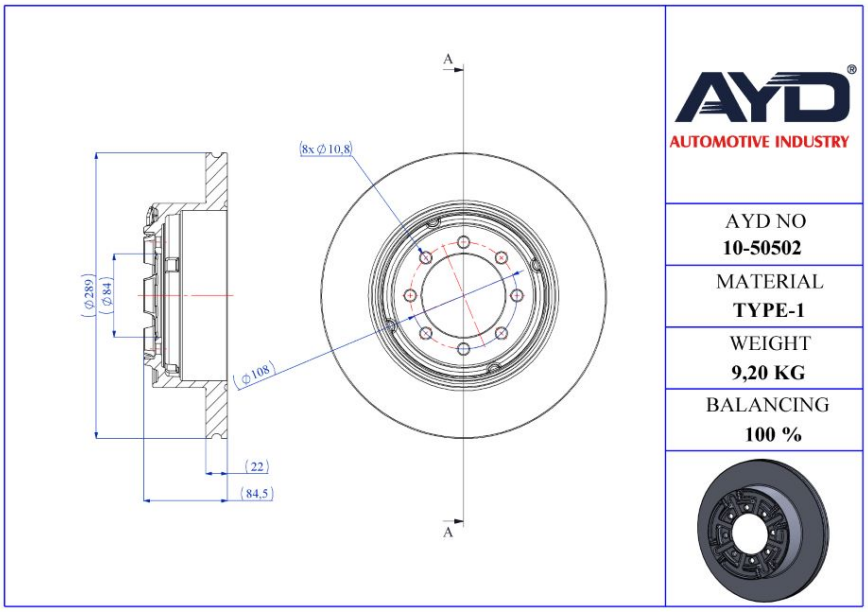

·OEM Standarts
·AYD Quality
·Safety
·Performance

OE:
7180256
1908773
42471111

10-50502

Technical Specifications:

Diameter (mm)	Height (mm)	Brake Disc Thickness (mm)	Min. Thickness (mm)	Centering Diameter (mm)	Bolt Hole Circle (mm)	Num. of Holes
289	84.5	22	20	84	108	8

IVECO

MODEL	START Y.	END Y.
DAILY CITYS Minibus/Bus	2014/06	2016/10
DAILY II	1989/01	1999/05
DAILY II Minibus/Bus	1989/01	1999/05
DAILY II Panelvan/Van	1989/01	2009/08
DAILY II Platform	1989/01	1999/05
DAILY III Minibus/Bus	1999/05	2006/05
DAILY III Panelvan/Van	1997/11	2009/10
DAILY III Platform	1998/03	2009/10
DAILY IV	2006/05	2011/08
DAILY IV Panelvan/Van	2006/05	2012/03
DAILY IV Platform	2006/05	2012/03

BRAKE DISC

- Rear Axle
- Solid

·OEM Standarts
·AYD Quality
·Safety
·Performance

OE:
584111H100

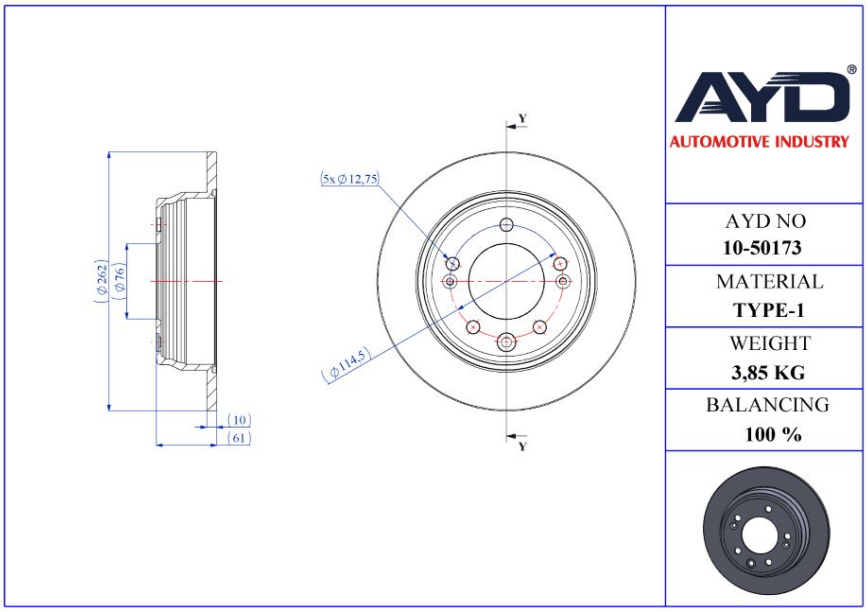

10-50173

Technical Specifications:

Diameter (mm)	Height (mm)	Brake Disc Thickness (mm)	Min. Thickness (mm)	Centering Diameter (mm)	Bolt Hole Circle (mm)	Num. of Holes
262	61	10	8.4	76	114.5	5+3

KIA

MODEL	START Y.	END Y.
CEE'D (JD)	2012/05	
CEE'D Hatchback (ED)	2006/12	2012/12
CEE'D SW (ED)	2007/07	2012/12
PRO CEE'D (ED)	2008/02	2013/02
SPORTAGE III (SL)	2009/09	

BRAKE DISC

- Rear Axle
- Solid

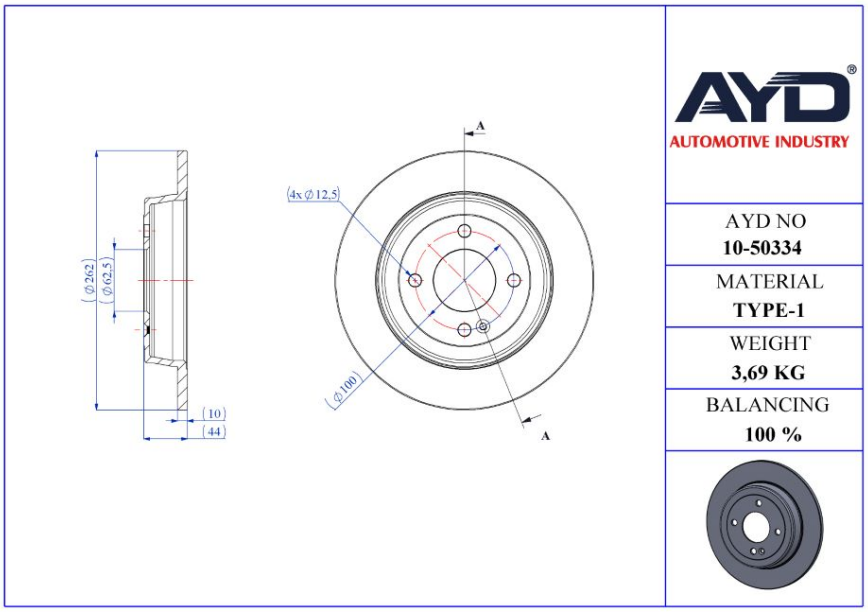

·OEM Standarts
·AYD Quality
·Safety
·Performance

OE:
584110U300

10-50334

Technical Specifications:

Diameter (mm)	Height (mm)	Brake Disc Thickness (mm)	Min. Thickness (mm)	Centering Diameter (mm)	Bolt Hole Circle (mm)	Num. of Holes
262	44	10	8.4	62.5	100	4+1

KIA

MODEL	START Y.	END Y.
RIO III (UB)	2011/09	
RIO III Hatchback Van (UB)	2011/09	
RIO III Sedan (UB)	2010/09	
RIO IV (YB, SC, FB)	2017/01	
RIO IV Sedan (SC, FB)	2017/07	
STONIC (YB)	2017/07	

BRAKE DISC

- Front Axle
- Rear Axle
- Solid

·OEM Standarts
·AYD Quality
·Safety
·Performance

OE:
60805117
7645054

10-50161

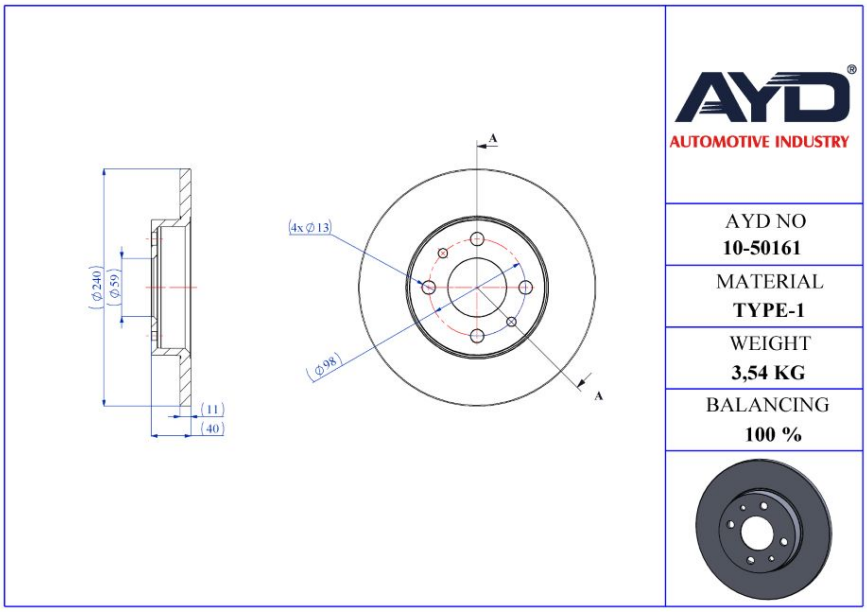

Technical Specifications:

Diameter (mm)	Height (mm)	Brake Disc Thickness (mm)	Min. Thickness (mm)	Centering Diameter (mm)	Bolt Hole Circle (mm)	Num. of Holes
240	40	11	9.2	59	98	4+2

LANCIA

MODEL	START Y.	END Y.
DEDRA (835_)	1989/01	1999/07
DEDRA SW (835_)	1994/07	1999/07
DELTA II (836_)	1993/06	1999/09
MUSA (350_)	2004/10	2012/09
Y (840_)	1995/11	2003/09
YPSILON (843_)	2003/10	2011/12

BRAKE DISC

- Front Axle
- Solid

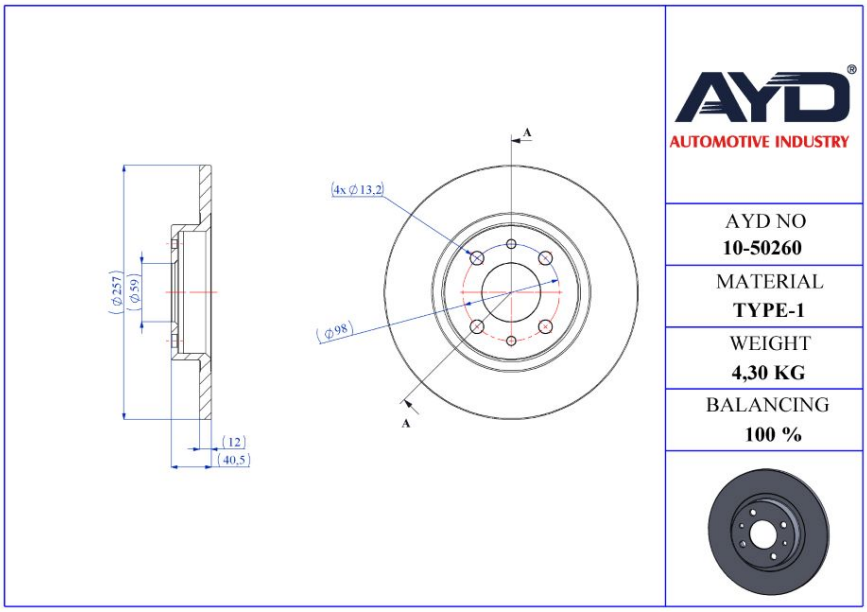

·OEM Standarts
·AYD Quality
·Safety
·Performance

OE:
92498609

10-50260

Technical Specifications:

Diameter (mm)	Height (mm)	Brake Disc Thickness (mm)	Min. Thickness (mm)	Centering Diameter (mm)	Bolt Hole Circle (mm)	Num. of Holes
257	40.5	12	10.2	59	98	4+2

LANCIA

MODEL	START Y.	END Y.
DEDRA (835_)	1989/01	1999/07
DEDRA SW (835_)	1994/07	1999/07
DELTA II (836_)	1993/06	1999/09
Y (840_)	1995/11	2003/09
YPSILON (312_)	2011/05	
YPSILON (843_)	2003/10	2011/12

BRAKE DISC

- Front Axle
- Vented

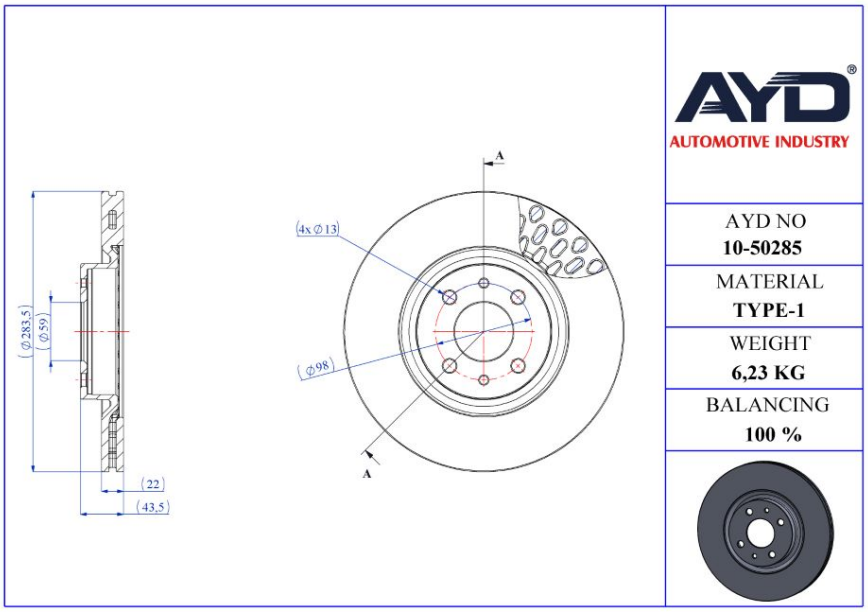

·OEM Standarts
·AYD Quality
·Safety
·Performance

OE:
46455892
46758714
60806135

10-50285

Technical Specifications:

Diameter (mm)	Height (mm)	Brake Disc Thickness (mm)	Min. Thickness (mm)	Centering Diameter (mm)	Bolt Hole Circle (mm)	Num. of Holes
283.5	43.5	22	20.2	59	98	4+2

LANCIA

MODEL	START Y.	END Y.
DELTA I (831_)	1979/09	1994/01
DELTA II (836_)	1993/06	1999/09
DELTA III (844_)	2008/08	2014/08
LYBRA (839_)	1999/07	2005/10
LYBRA SW (839_)	1999/07	2005/10
MUSA (350_)	2004/10	2012/09
THEMA (834_)	1984/11	1994/07
THEMA SW (834_)	1987/03	1994/07

BRAKE DISC

- Rear Axle
- Solid

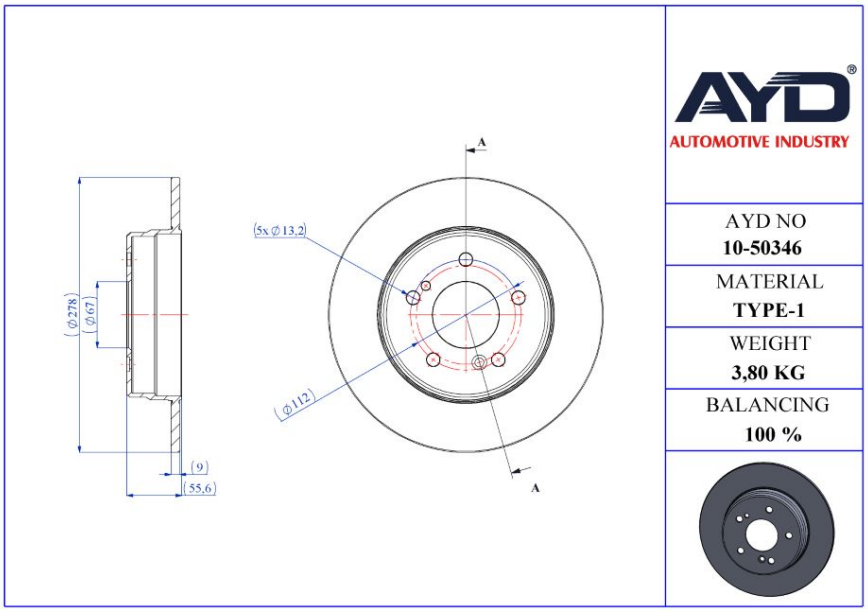

·OEM Standarts
·AYD Quality
·Safety
·Performance

OE:
A1244230512
2034230112
A2014230512

10-50346

Technical Specifications:

Diameter (mm)	Height (mm)	Brake Disc Thickness (mm)	Min. Thickness (mm)	Centering Diameter (mm)	Bolt Hole Circle (mm)	Num. of Holes
278	55.6	9	7.3	67	112	5+2

MERCEDES-BENZ

MODEL	START Y.	END Y.
124 Sedan (W124)	1984/12	1993/08
124 T-Model (S124)	1985/09	1993/12
C-SERIES (W202)	1993/03	2000/05
C-SERIES (W203)	2000/05	2007/12
C-SERIES Coupe (CL203)	2001/03	2011/06
C-SERIES T-Model (S202)	1996/06	2001/03
C-SERIES T-Model (S203)	2001/03	2007/08
E-SERIES (W210)	1995/06	2003/08
E-SERIES T-Model (S124)	1993/06	1996/06
S-SERIES Coupe (C140)	1992/07	1999/12
SLK (R171)	2004/03	2011/12

BRAKE DISC

- Rear Axle
- Solid

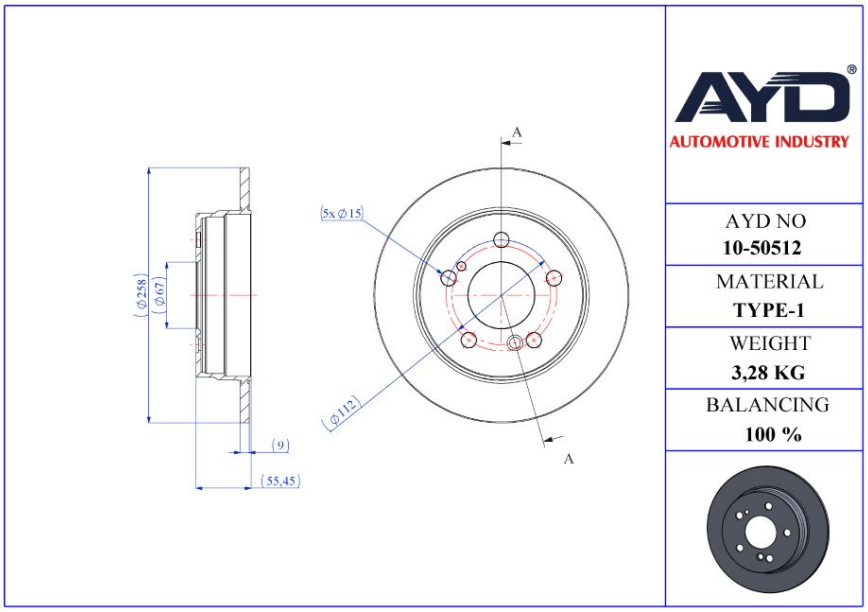

·OEM Standarts
·AYD Quality
·Safety
·Performance

OE:
2014231112
2014230912
A 201 423 09 12

10-50512

Technical Specifications:

Diameter (mm)	Height (mm)	Brake Disc Thickness (mm)	Min. Thickness (mm)	Centering Diameter (mm)	Bolt Hole Circle (mm)	Num. of Holes
258	55.45	9	7.3	67	112	5+2

MERCEDES-BENZ

MODEL	START Y.	END Y.
124 Coupe (C124)	1987/03	1993/07
124 Sedan (W124)	1984/12	1993/08
190 (W201)	1982/10	1993/08
E-SERIES (W124)	1993/02	1996/06
E-SERIES Coupe (C124)	1993/06	1997/06

BRAKE DISC

- Rear Axle
- Solid

·OEM Standarts
·AYD Quality
·Safety
·Performance

OE:
4320600QAA

10-50244

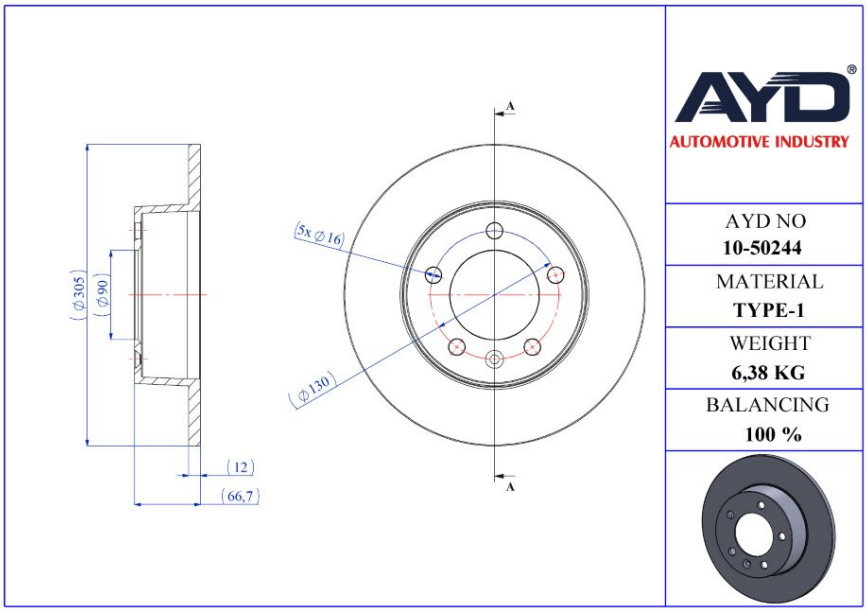

Technical Specifications:

Diameter (mm)	Height (mm)	Brake Disc Thickness (mm)	Min. Thickness (mm)	Centering Diameter (mm)	Bolt Hole Circle (mm)	Num. of Holes
305	66.7	12	10.5	90	130	5+1

NISSAN

MODEL	START Y.	END Y.
INTERSTAR Minibus/Bus (X70)	2002/04	
INTERSTAR Panelvan/Van (X70)	2002/04	
INTERSTAR Platform	2003/08	

BRAKE DISC

- Rear Axle
- Solid

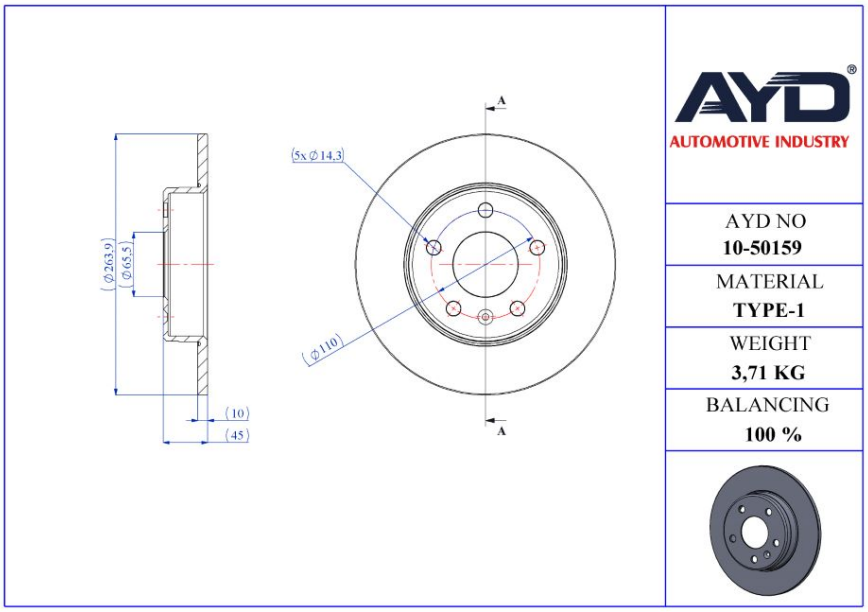

·OEM Standarts
·AYD Quality
·Safety
·Performance

OE:
95526658
917772
569109

10-50159

Technical Specifications:

Diameter (mm)	Height (mm)	Brake Disc Thickness (mm)	Min. Thickness (mm)	Centering Diameter (mm)	Bolt Hole Circle (mm)	Num. of Holes
263.9	45	10	8	65.5	110	5+1

OPEL

MODEL	START Y.	END Y.
ZAFIRA / ZAFIRA FAMILY B (A05)	2005/07	2019/05

BRAKE DISC

- Front Axle
- Vented

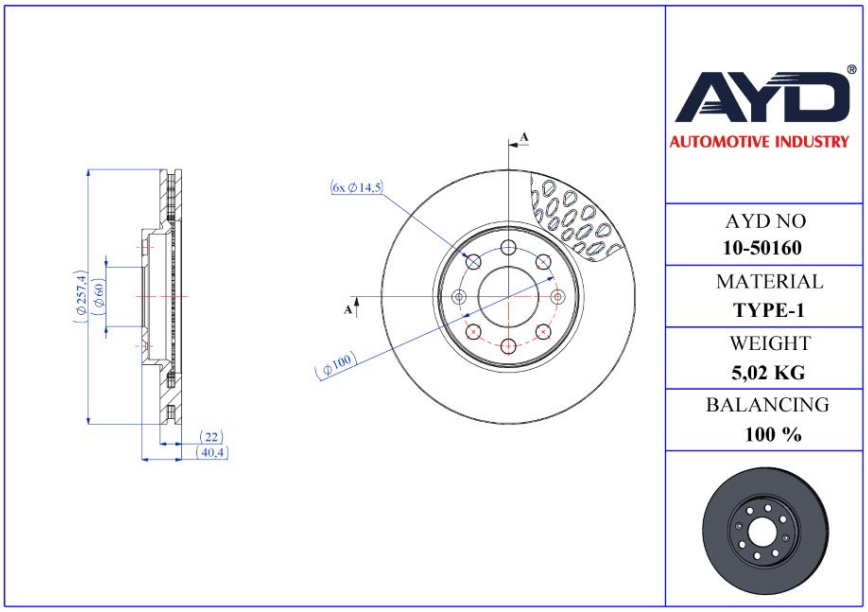

·OEM Standarts
·AYD Quality
·Safety
·Performance

OE:
93197241
569065
569024

10-50160

Technical Specifications:

Diameter (mm)	Height (mm)	Brake Disc Thickness (mm)	Min. Thickness (mm)	Centering Diameter (mm)	Bolt Hole Circle (mm)	Num. of Holes
257.4	40.4	22	20	60	100	6+2

OPEL

MODEL	START Y.	END Y.
ADAM (M13)	2012/10	2019/02
CORSA D (S07)	2006/07	2014/08
CORSA D (S07)	2006/07	2014/08
CORSA E (X15)	2014/09	
CORSA E (X15)	2014/09	

BRAKE DISC

- Rear Axle
- Solid

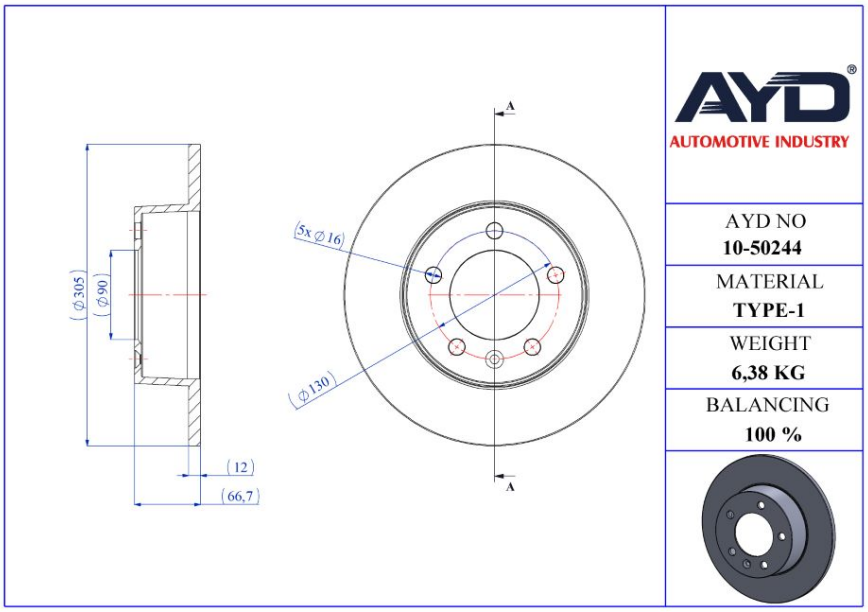

·OEM Standarts
·AYD Quality
·Safety
·Performance

OE:
4403045
9111045

10-50244

Technical Specifications:

Diameter (mm)	Height (mm)	Brake Disc Thickness (mm)	Min. Thickness (mm)	Centering Diameter (mm)	Bolt Hole Circle (mm)	Num. of Holes
305	66.7	12	10.5	90	130	5+1

OPEL

MODEL	START Y.	END Y.
MOVANO (X70)	1999/01	
MOVANO Minibus/Bus (X70)	1998/07	
MOVANO Panelvan/Van (X70)	1999/01	
MOVANO Platform (X70)	1998/07	

BRAKE DISC

- Rear Axle
- Solid

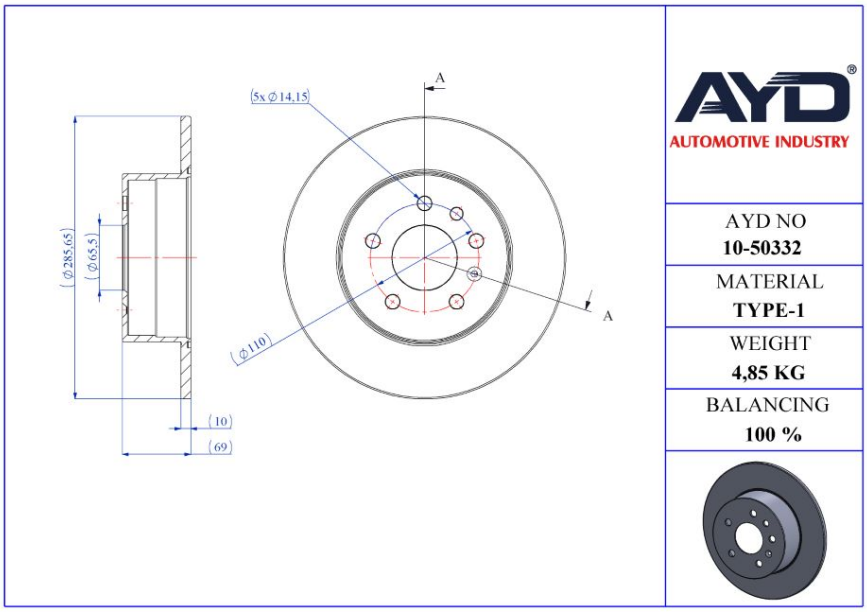

·OEM Standarts
·AYD Quality
·Safety
·Performance

OE:
5391578
90512910
569210

10-50332

Technical Specifications:

Diameter (mm)	Height (mm)	Brake Disc Thickness (mm)	Min. Thickness (mm)	Centering Diameter (mm)	Bolt Hole Circle (mm)	Num. of Holes
285.65	69	10	8	65.5	110	5+2

OPEL

MODEL	START Y.	END Y.
VECTRA B (J96)	1995/09	2004/07
VECTRA B Hatchback (J96)	1995/09	2003/07
VECTRA B Station wagon (J96)	1996/11	2003/07

BRAKE DISC

- Front Axle
- Vented

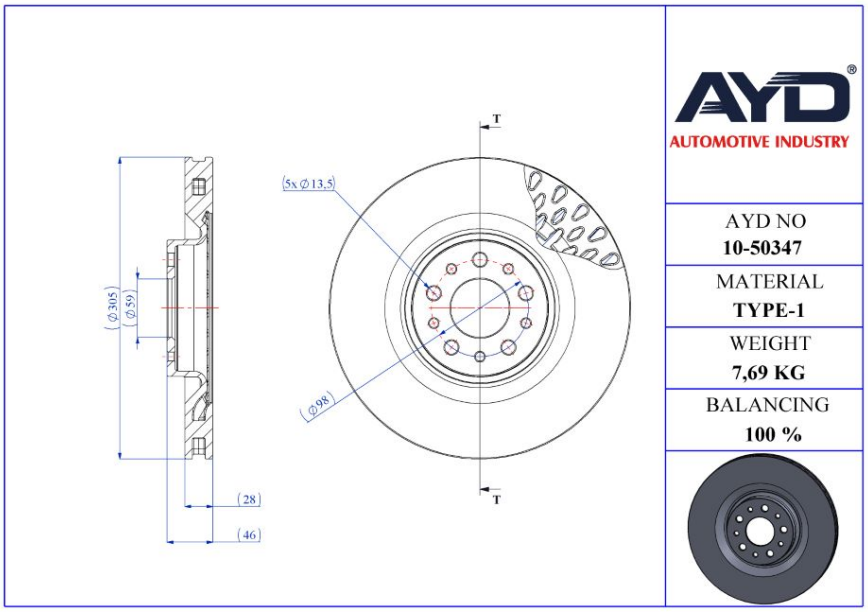

·OEM Standarts
·AYD Quality
·Safety
·Performance

OE:
95511283
95515332
569 096

10-50347

Technical Specifications:

Diameter (mm)	Height (mm)	Brake Disc Thickness (mm)	Min. Thickness (mm)	Centering Diameter (mm)	Bolt Hole Circle (mm)	Num. of Holes
305	46	28	26	59	98	5+5

OPEL

MODEL	START Y.	END Y.
COMBO (X12)	2012/02	
COMBO Tour (X12)	2012/02	

BRAKE DISC

- Rear Axle
- Solid

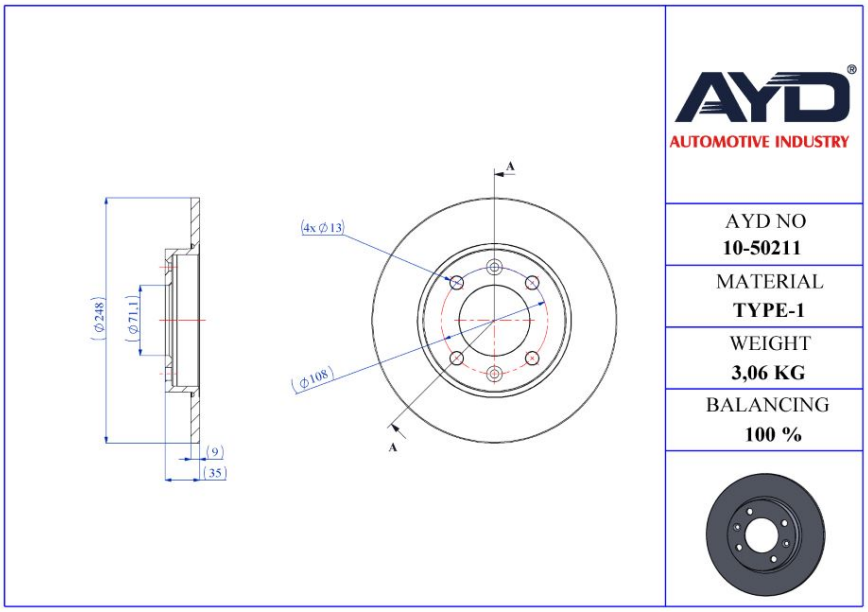

·OEM Standarts
·AYD Quality
·Safety
·Performance

OE:
4246W9

10-50211

Technical Specifications:

Diameter (mm)	Height (mm)	Brake Disc Thickness (mm)	Min. Thickness (mm)	Centering Diameter (mm)	Bolt Hole Circle (mm)	Num. of Holes
248	35	9	8	71.1	108	4+2

PEUGEOT

MODEL	START Y.	END Y.
1007 (KM_)	2005/04	
307 (3A/C)	2000/08	2012/12
307 Break (3E)	2002/03	2009/12
307 CC (3B)	2003/03	2009/06
307 SW (3H)	2002/03	2009/12
307 SW Combi van (3E_, 3H_)	2002/04	2009/12
PARTNER (5_, G_)	1996/06	
PARTNER MPV (5_, G_)	1996/05	2015/12

BRAKE DISC

- Front Axle
- Vented

·OEM Standarts
·AYD Quality
·Safety
·Performance

OE:
00 004 249 96
91 517 695

10-50220

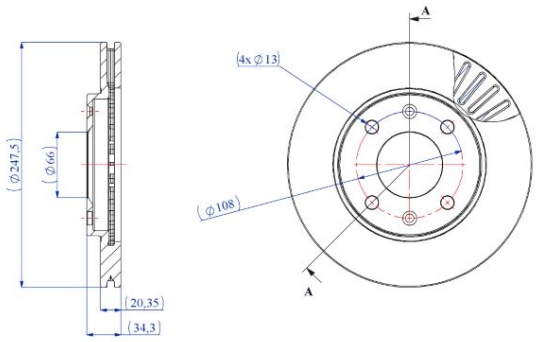

AYD
AUTOMOTIVE INDUSTRY

AYD NO	10-50220
MATERIAL	TYPE-1
WEIGHT	3,96 KG
BALANCING	100 %

Technical Specifications:

Diameter (mm)	Height (mm)	Brake Disc Thickness (mm)	Min. Thickness (mm)	Centering Diameter (mm)	Bolt Hole Circle (mm)	Num. of Holes
247.5	34.3	20.35	18.5	66	108	4+2

PEUGEOT

MODEL	START Y.	END Y.
106 I (1A, 1C)	1991/08	1996/04
106 II (1A_, 1C_)	1996/04	2005/05
106 Van I (1S_)	1991/08	1996/03
106 Van II (1S_)	1996/04	2001/03
205 I (741A/C)	1983/02	1987/10
205 I Cabrio (741B, 20D)	1986/03	1995/11
205 II (20A/C)	1987/01	2000/12
206 Hatchback (2A/C)	1998/08	2012/12
206 Sedan	2007/03	
206 SW (2E/K)	2002/07	
206 Van	1999/04	2009/03

BRAKE DISC

- Front Axle
- Solid

·OEM Standarts
·AYD Quality
·Safety
·Performance

OE:
4249A5

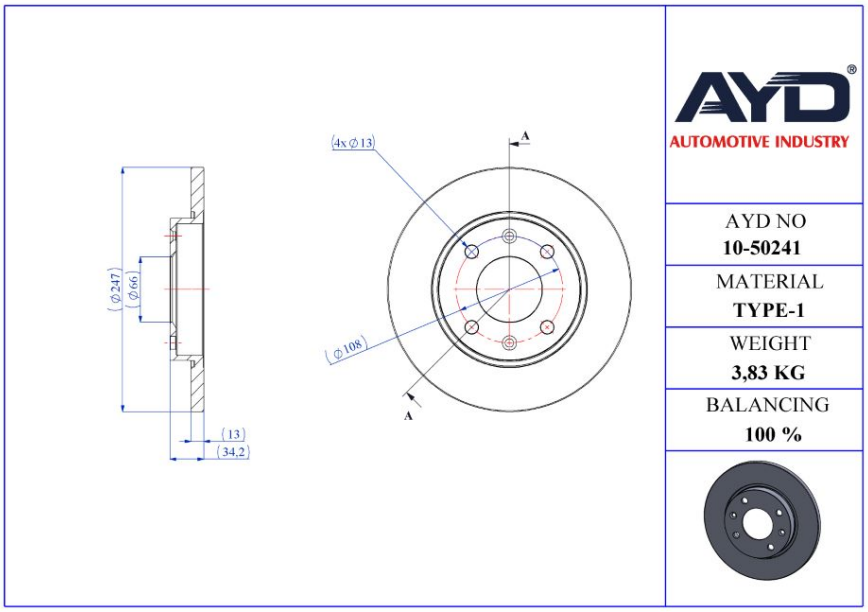

10-50241

Technical Specifications:

Diameter (mm)	Height (mm)	Brake Disc Thickness (mm)	Min. Thickness (mm)	Centering Diameter (mm)	Bolt Hole Circle (mm)	Num. of Holes
247	34.2	13	11	66	108	4+2

PEUGEOT

MODEL	START Y.	END Y.
206 Hatchback (2A/C)	1998/08	2012/12
206 Sedan	2007/03	
206 SW (2E/K)	2002/07	
206+ (2L_, 2M_)	2009/01	2013/08

BRAKE DISC

- Rear Axle
- Solid

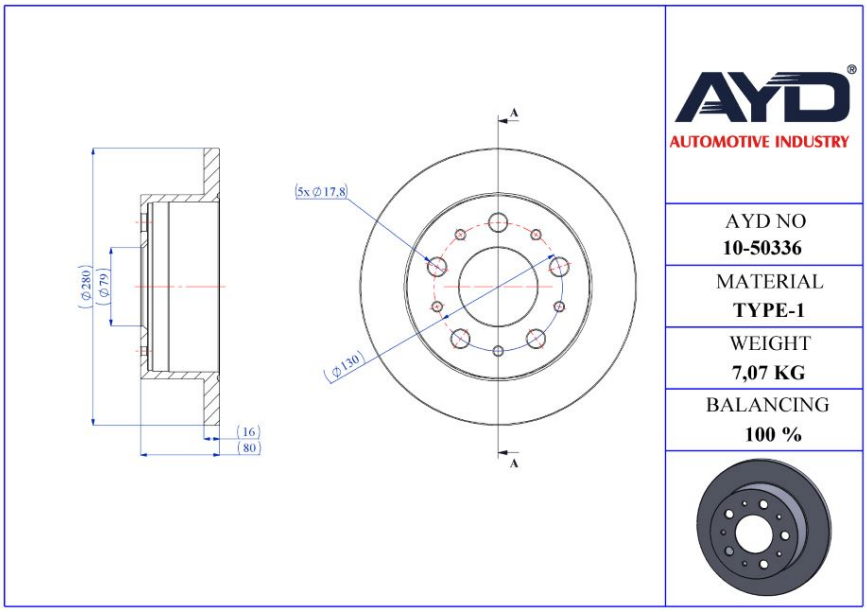

·OEM Standarts
·AYD Quality
·Safety
·Performance

OE:
4249K8

10-50336

Technical Specifications:

Diameter (mm)	Height (mm)	Brake Disc Thickness (mm)	Min. Thickness (mm)	Centering Diameter (mm)	Bolt Hole Circle (mm)	Num. of Holes
280	80	16	14.2	79	130	5+5

PEUGEOT

MODEL	START Y.	END Y.
BOXER Minibus/Bus	2005/09	
BOXER Panelvan/Van	2006/04	
BOXER Platform	2006/04	

BRAKE DISC

- Front Axle
- Vented

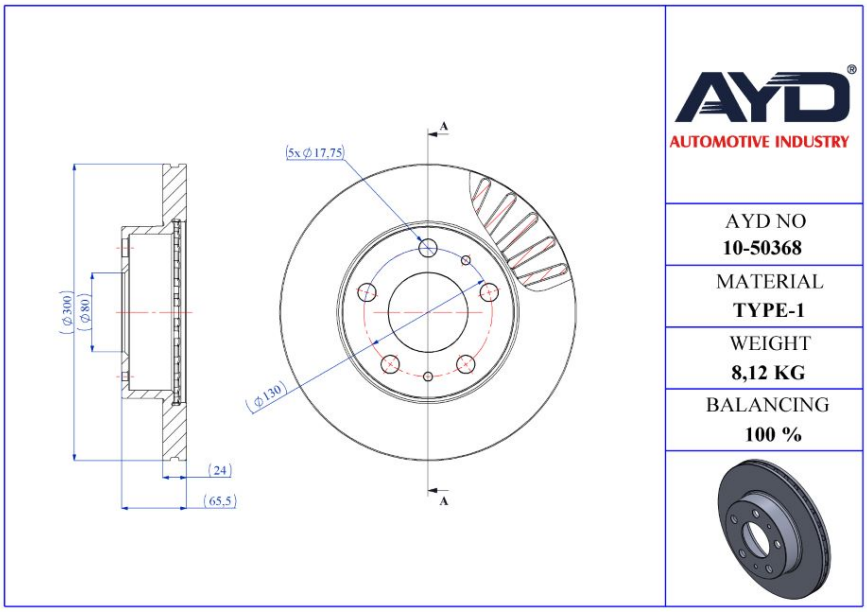

·OEM Standarts
·AYD Quality
·Safety
·Performance

OE:
4246Y3

10-50368

Technical Specifications:

Diameter (mm)	Height (mm)	Brake Disc Thickness (mm)	Min. Thickness (mm)	Centering Diameter (mm)	Bolt Hole Circle (mm)	Num. of Holes
300	65.5	24	21.9	80	130	5+2

PEUGEOT

MODEL	START Y.	END Y.
BOXER Minibus/Bus (230P)	1994/03	2002/04
BOXER Minibus/Bus (244, Z_)	2001/12	
BOXER Panelvan/Van	2006/04	
BOXER Panelvan/Van (230L)	1994/03	2005/08
BOXER Panelvan/Van (244)	2001/12	
BOXER Platform	2006/04	
BOXER Platform (244)	2001/12	
BOXER Platform (ZCT_)	1994/03	2002/04

BRAKE DISC

- Front Axle
- Vented

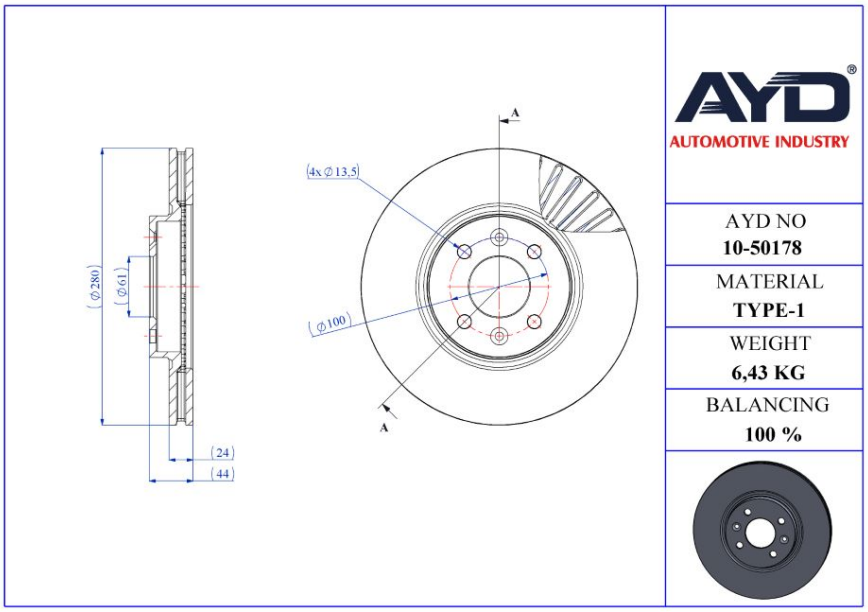

·OEM Standarts
·AYD Quality
·Safety
·Performance

OE:
7701207829
7701206118
7701205842

10-50178

Technical Specifications:

Diameter (mm)	Height (mm)	Brake Disc Thickness (mm)	Min. Thickness (mm)	Centering Diameter (mm)	Bolt Hole Circle (mm)	Num. of Holes
280	44	24	21.8	61	100	4+2

RENAULT

MODEL	START Y.	END Y.
CAPTUR I (J5_, H5_)	2013/06	
CLIO II (BB_, CB_)	1998/03	2016/12
CLIO III (BR0/1, CR0/1)	2005/01	2014/12
CLIO V (B7_)	2019/06	
DOKKER	2013/12	
GRAND SCÉNIC II (JM0/1_)	2004/04	2009/06
KANGOO (KC0/1_)	1997/08	
KANGOO Express (FC0/1_)	1997/08	
LAGUNA I (B56_, 556_)	1993/11	2002/08
LAGUNA I Grandtour (K56_)	1995/09	2002/08
MEGANE I (BA0/1_)	1995/08	2004/12

BRAKE DISC

- Front Axle
- Vented

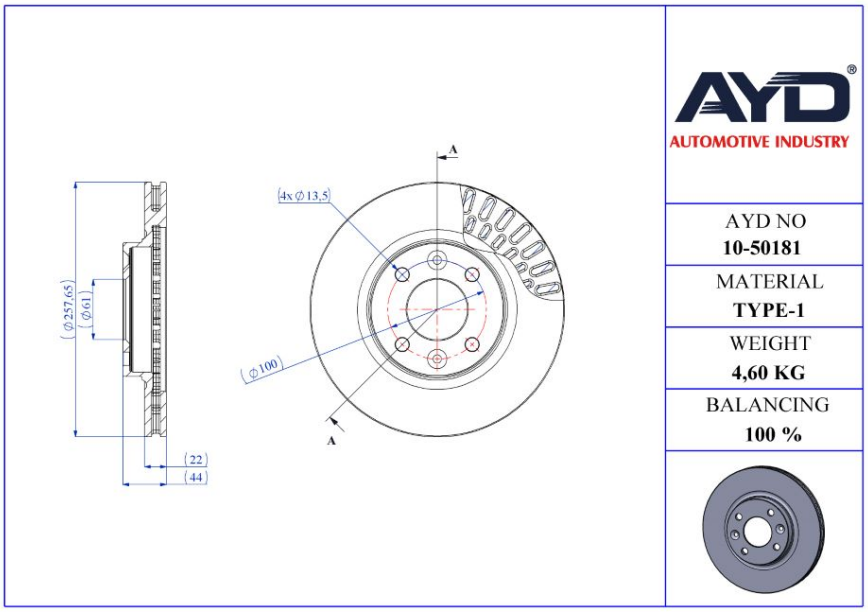

·OEM Standarts
·AYD Quality
·Safety
·Performance

OE:
402062212R
402066839R
402063149R

10-50181

Technical Specifications:

Diameter (mm)	Height (mm)	Brake Disc Thickness (mm)	Min. Thickness (mm)	Centering Diameter (mm)	Bolt Hole Circle (mm)	Num. of Holes
257.7	44	22	19.8	61	100	4+2

RENAULT

MODEL	START Y.	END Y.
CLIO IV (BH_)	2014/01	
CLIO IV (BH_)	2012/11	
CLIO IV Grandtour (KH_)	2013/01	
CLIO V (B7_)	2019/06	
LOGAN II Station wagon (K8_)	2013/11	
LOGAN/STEPWAY II (L8_)	2012/09	
SANDERO/STEPWAY I (BS_)	2007/11	
SANDERO/STEPWAY II (B8_)	2013/11	
THALIA II (LU_)	2008/09	
THALIA III (L8_)	2013/12	
TWINGO III (BCM_)	2014/09	

BRAKE DISC

- Rear Axle
- Solid

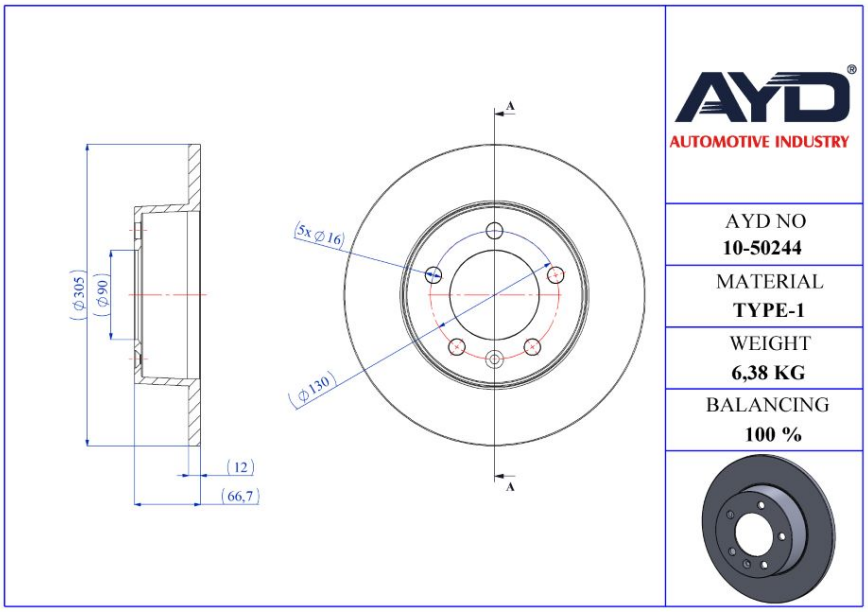

·OEM Standarts
·AYD Quality
·Safety
·Performance

OE:
7700314107

10-50244

Technical Specifications:

Diameter (mm)	Height (mm)	Brake Disc Thickness (mm)	Min. Thickness (mm)	Centering Diameter (mm)	Bolt Hole Circle (mm)	Num. of Holes
305	66.7	12	10.5	90	130	5+1

RENAULT

MODEL	START Y.	END Y.
MASTER II Minibus/Bus (JD)	1998/03	
MASTER II Panelvan/Van (FD)	1998/07	
MASTER II Platform (ED/HD/UD)	1998/07	

BRAKE DISC

- Front Axle
- Vented

·OEM Standarts
·AYD Quality
·Safety
·Performance

OE:
402060540R

10-50509

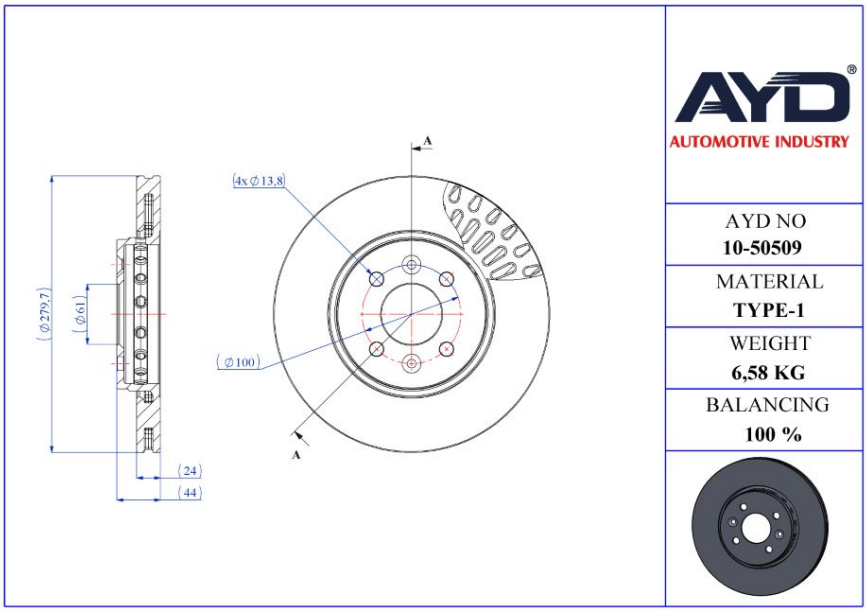

Technical Specifications:

Diameter (mm)	Height (mm)	Brake Disc Thickness (mm)	Min. Thickness (mm)	Centering Diameter (mm)	Bolt Hole Circle (mm)	Num. of Holes
279.7	44	24	21.8	61	100	4+2

RENAULT

MODEL	START Y.	END Y.
CAPTUR I (J5_, H5_)	2013/06	
CLIO II (BB_, CB_)	1998/03	2016/12
CLIO III (BR0/1, CR0/1)	2005/01	2014/12
CLIO V (B7_)	2019/06	
DOKKER	2013/12	
GRAND SCÉNIC II (JM0/1_)	2004/04	2009/06
KANGOO (KC0/1_)	1997/08	
KANGOO Express (FC0/1_)	1997/08	
LAGUNA I (B56_, 556_)	1993/11	2002/08
LAGUNA I Grandtour (K56_)	1995/09	2002/08
LODGY (JS_)	2013/07	

BRAKE DISC

- Rear Axle
- Solid

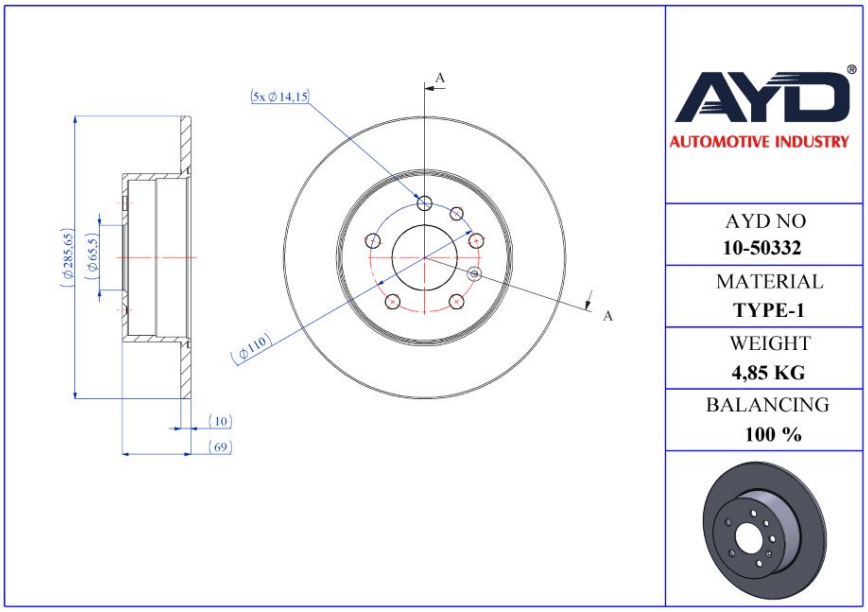

·OEM Standarts
·AYD Quality
·Safety
·Performance

OE:
5084751
4839338
4565693

10-50332

Technical Specifications:

Diameter (mm)	Height (mm)	Brake Disc Thickness (mm)	Min. Thickness (mm)	Centering Diameter (mm)	Bolt Hole Circle (mm)	Num. of Holes
285.65	69	10	8	65.5	110	5+2

SAAB

MODEL	START Y.	END Y.
9-3 (YS3D)	1998/02	2003/08
9-3 Cabriolet (YS3D)	1998/02	2003/08
9-5 (YS3E)	1997/09	2009/12
9-5 Station wagon (YS3E)	1998/10	2009/12
900 II	1993/07	1999/04
900 II Cabrio	1993/09	1999/04
900 II Coupe	1993/12	1999/04

BRAKE DISC

- Front Axle
- Vented

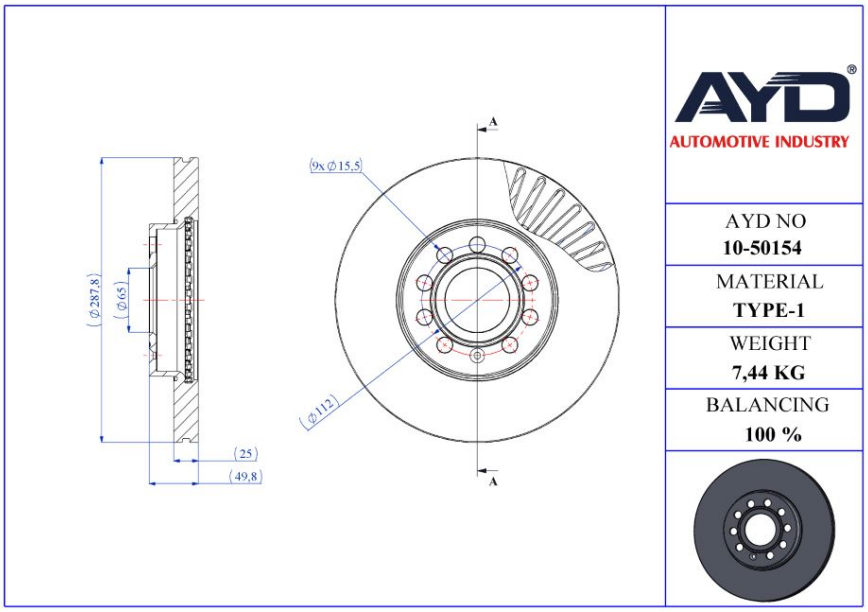

·OEM Standarts
·AYD Quality
·Safety
·Performance

OE:
1J0615301K

10-50154

Technical Specifications:

Diameter (mm)	Height (mm)	Brake Disc Thickness (mm)	Min. Thickness (mm)	Centering Diameter (mm)	Bolt Hole Circle (mm)	Num. of Holes
287.8	49.8	25	22	65	112	9+1

SEAT

MODEL	START Y.	END Y.
ALTEA (5P1)	2004/03	
ALTEA XL (5P5, 5P8)	2006/10	
IBIZA IV (6J5, 6P1)	2008/03	2017/12
IBIZA IV SC (6J1, 6P5)	2008/06	2018/12
IBIZA IV ST (6J8, 6P8)	2010/03	2016/07
LEON (5F1)	2012/09	
LEON (1P1)	2005/05	2013/12
LEON (5F1)	2012/09	
LEON SC (5F5)	2013/01	
LEON ST (5F8)	2012/09	
LEON ST Combi van (5F8)	2013/01	

BRAKE DISC

- Rear Axle
- Solid

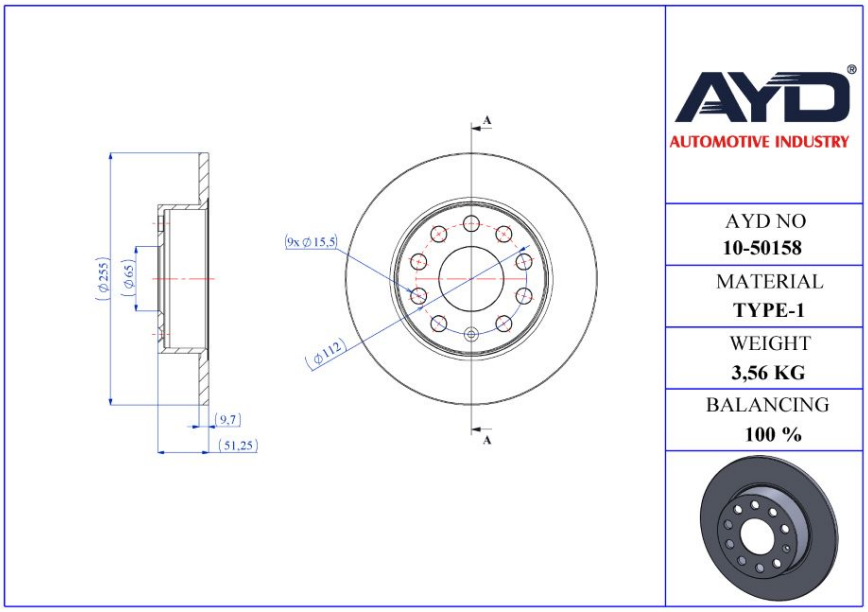

·OEM Standarts
·AYD Quality
·Safety
·Performance

OE:
1K0615601K

10-50158

Technical Specifications:

Diameter (mm)	Height (mm)	Brake Disc Thickness (mm)	Min. Thickness (mm)	Centering Diameter (mm)	Bolt Hole Circle (mm)	Num. of Holes
255	51.25	9.7	7	65	112	9+1

SEAT

MODEL	START Y.	END Y.
ALTEA (5P1)	2004/03	
ALTEA XL (5P5, 5P8)	2006/10	
LEON (5F1)	2012/09	
LEON (1P1)	2005/05	2013/12
LEON (5F1)	2012/09	
LEON SC (5F5)	2013/01	
LEON ST (5F8)	2012/09	
LEON ST Combi van (5F8)	2013/01	
TOLEDO III (5P2)	2004/04	2009/05

BRAKE DISC

- Front Axle
- Vented

·OEM Standarts
·AYD Quality
·Safety
·Performance

OE:
1K0615301AA

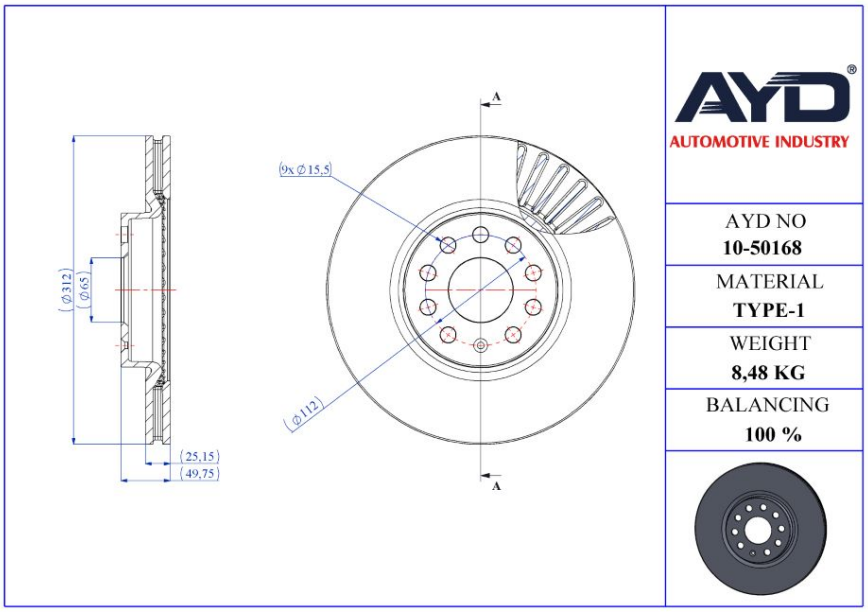

10-50168

Technical Specifications:

Diameter (mm)	Height (mm)	Brake Disc Thickness (mm)	Min. Thickness (mm)	Centering Diameter (mm)	Bolt Hole Circle (mm)	Num. of Holes
312	49.75	25.15	22	65	112	9+1

SEAT

MODEL	START Y.	END Y.
ALTEA (5P1)	2004/03	
ALTEA XL (5P5, 5P8)	2006/10	
ATECA (KH7, KHP)	2016/04	
LEON (5F1)	2012/09	
LEON (1P1)	2005/05	2013/12
LEON (5F1)	2012/09	
LEON SC (5F5)	2013/01	
LEON ST (5F8)	2012/09	
LEON ST Combi van (5F8)	2013/01	

BRAKE DISC

- Rear Axle
- Solid

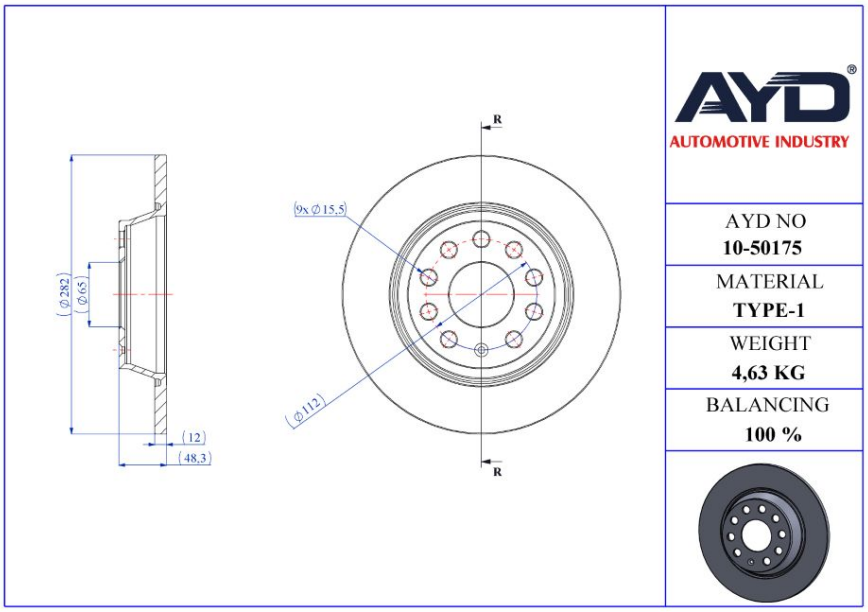

·OEM Standarts
·AYD Quality
·Safety
·Performance

OE:
5Q0615601G

10-50175

Technical Specifications:

Diameter (mm)	Height (mm)	Brake Disc Thickness (mm)	Min. Thickness (mm)	Centering Diameter (mm)	Bolt Hole Circle (mm)	Num. of Holes
282	48.3	12	10	65	112	9+1

SEAT

MODEL	START Y.	END Y.
ALHAMBRA (710, 711)	2010/06	
ALTEA (5P1)	2004/03	
ALTEA XL (5P5, 5P8)	2006/10	
LEON (1P1)	2005/05	2013/12
TOLEDO III (5P2)	2004/04	2009/05

BRAKE DISC

- Rear Axle
- Solid

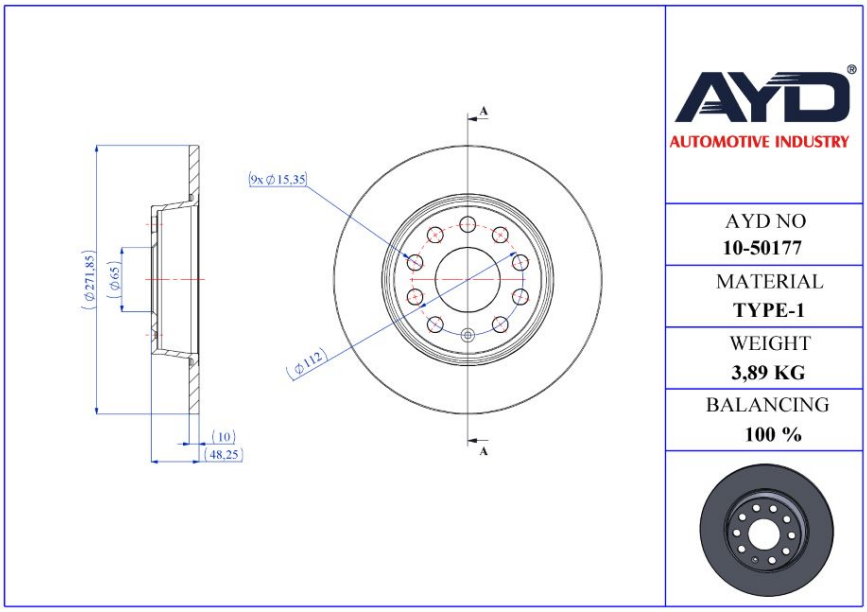

·OEM Standarts
·AYD Quality
·Safety
·Performance

OE:
1K0615601AA

10-50177

Technical Specifications:

Diameter (mm)	Height (mm)	Brake Disc Thickness (mm)	Min. Thickness (mm)	Centering Diameter (mm)	Bolt Hole Circle (mm)	Num. of Holes
271.85	48.25	10	8	65	112	9+1

SEAT

MODEL	START Y.	END Y.
ALTEA (5P1)	2004/03	
ALTEA XL (5P5, 5P8)	2006/10	
ATECA (KH7, KHP)	2016/04	
LEON (5F1)	2012/09	
LEON (1P1)	2005/05	2013/12
LEON (5F1)	2012/09	
LEON (KL1)	2019/11	
LEON SC (5F5)	2013/01	
LEON Sportstourer (KL8)	2020/03	
LEON ST (5F8)	2012/09	
LEON ST Combi van (5F8)	2013/01	

BRAKE DISC

- Front Axle
- Vented

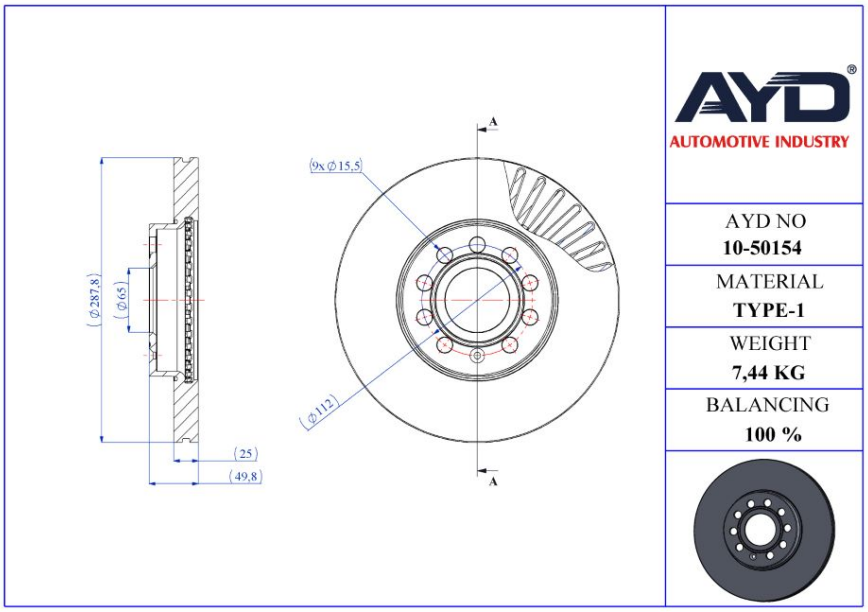

·OEM Standarts
·AYD Quality
·Safety
·Performance

OE:
1K0615301T

10-50154

Technical Specifications:

Diameter (mm)	Height (mm)	Brake Disc Thickness (mm)	Min. Thickness (mm)	Centering Diameter (mm)	Bolt Hole Circle (mm)	Num. of Holes
287.8	49.8	25	22	65	112	9+1

SKODA

MODEL	START Y.	END Y.
FABIA II (542)	2006/12	2014/12
FABIA II Combi (545)	2007/10	2014/12
FABIA III (NJ3)	2014/08	
FABIA III Station wagon (NJ5)	2014/08	
OCTAVIA II (1Z3)	2004/02	2013/06
OCTAVIA II Combi (1Z5)	2004/02	2013/06
OCTAVIA III (5E3, NL3, NR3)	2012/11	
OCTAVIA III Combi (5E5, 5E6)	2012/11	
RAPID (NH3)	2012/07	2019/12
RAPID Spaceback (NH1)	2012/07	2019/12
ROOMSTER (5J7)	2006/03	2015/05

BRAKE DISC

- Rear Axle
- Solid

·OEM Standarts
·AYD Quality
·Safety
·Performance

OE:

10-50158

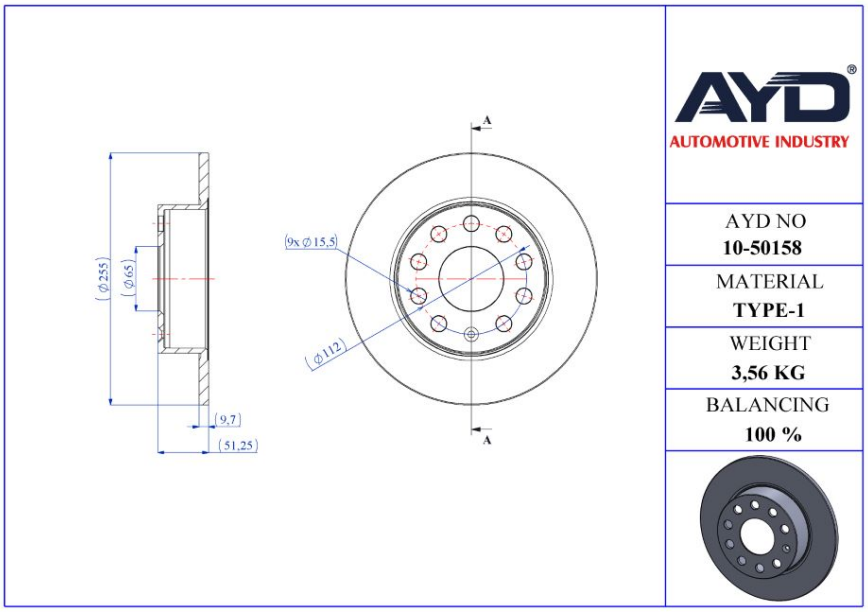

Technical Specifications:

Diameter (mm)	Height (mm)	Brake Disc Thickness (mm)	Min. Thickness (mm)	Centering Diameter (mm)	Bolt Hole Circle (mm)	Num. of Holes
255	51.25	9.7	7	65	112	9+1

SKODA

MODEL	START Y.	END Y.
OCTAVIA II (1Z3)	2004/02	2013/06
OCTAVIA II Combi (1Z5)	2004/02	2013/06
OCTAVIA III (5E3, NL3, NR3)	2012/11	
OCTAVIA III Combi (5E5, 5E6)	2012/11	
YETI (5L)	2009/05	2017/12

BRAKE DISC

- Front Axle
- Vented

·OEM Standarts
·AYD Quality
·Safety
·Performance

OE:
1K0615301AA

10-50168

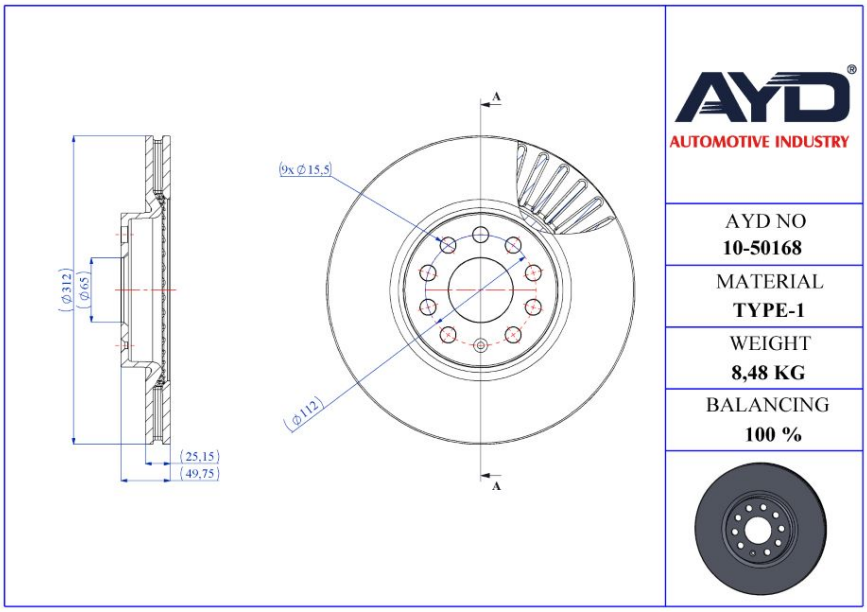

Technical Specifications:

Diameter (mm)	Height (mm)	Brake Disc Thickness (mm)	Min. Thickness (mm)	Centering Diameter (mm)	Bolt Hole Circle (mm)	Num. of Holes
312	49.75	25.15	22	65	112	9+1

SKODA

MODEL	START Y.	END Y.
KAROQ (NU7)	2017/07	
KODIAQ (NS7, NV7)	2016/10	
OCTAVIA III (5E3, NL3, NR3)	2012/11	
OCTAVIA III Combi (5E5, 5E6)	2012/11	
SUPERB II (3T4)	2008/03	2015/05
SUPERB II Station wagon (3T5)	2009/10	2015/05
SUPERB III (3V3)	2015/03	
SUPERB III Station wagon (3V5)	2015/03	
YETI (5L)	2009/05	2017/12

BRAKE DISC

- Rear Axle
- Solid

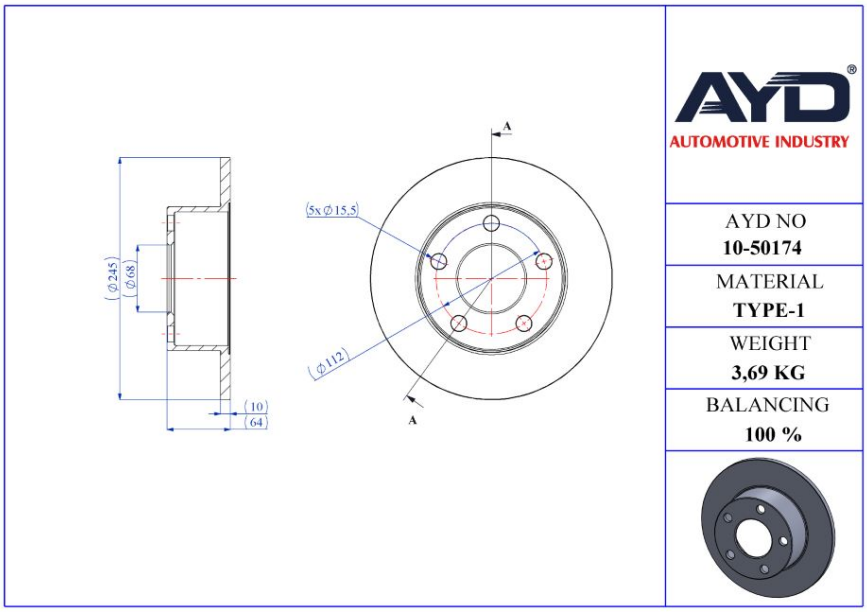

·OEM Standarts
·AYD Quality
·Safety
·Performance

OE:
8E0615601

10-50174

Technical Specifications:

Diameter (mm)	Height (mm)	Brake Disc Thickness (mm)	Min. Thickness (mm)	Centering Diameter (mm)	Bolt Hole Circle (mm)	Num. of Holes
245	64	10	8	68	112	5

SKODA

MODEL	START Y.	END Y.
SUPERB I (3U4)	2001/12	2008/03

BRAKE DISC

- Rear Axle
- Solid

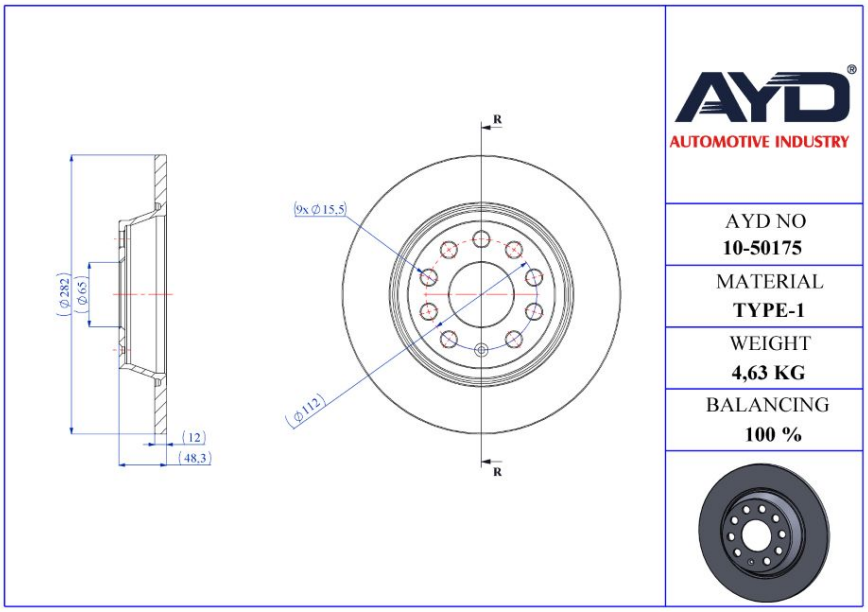

·OEM Standarts
·AYD Quality
·Safety
·Performance

OE:
3CD615601

10-50175

Technical Specifications:

Diameter (mm)	Height (mm)	Brake Disc Thickness (mm)	Min. Thickness (mm)	Centering Diameter (mm)	Bolt Hole Circle (mm)	Num. of Holes
282	48.3	12	10	65	112	9+1

SKODA

MODEL	START Y.	END Y.
OCTAVIA II (1Z3)	2004/02	2013/06
OCTAVIA II Combi (1Z5)	2004/02	2013/06
SUPERB II (3T4)	2008/03	2015/05
SUPERB II Station wagon (3T5)	2009/10	2015/05
YETI (5L)	2009/05	2017/12

BRAKE DISC

- Rear Axle
- Solid

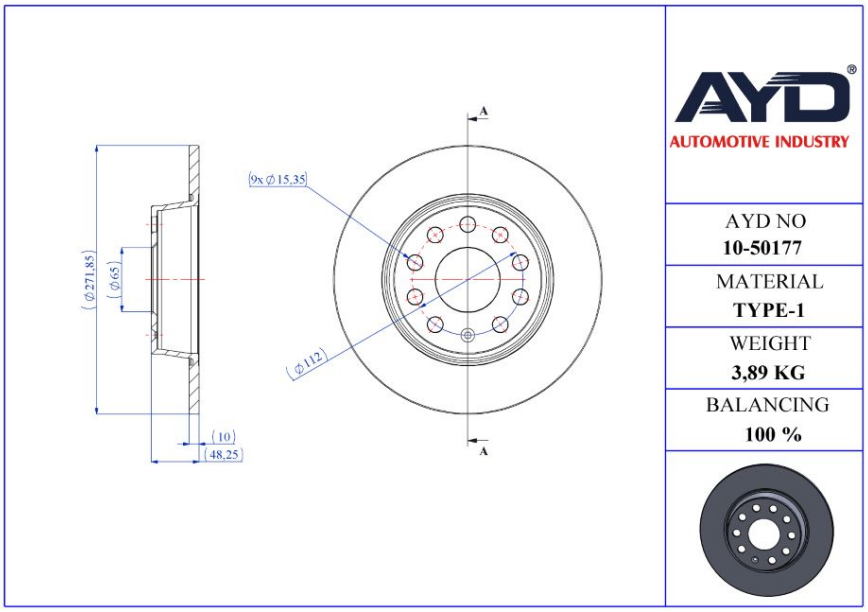

·OEM Standarts
·AYD Quality
·Safety
·Performance

OE:
5QD 615 601

10-50177

Technical Specifications:

Diameter (mm)	Height (mm)	Brake Disc Thickness (mm)	Min. Thickness (mm)	Centering Diameter (mm)	Bolt Hole Circle (mm)	Num. of Holes
271.85	48.25	10	8	65	112	9+1

SKODA

MODEL	START Y.	END Y.
KAROQ (NU7)	2017/07	
OCTAVIA II (1Z3)	2004/02	2013/06
OCTAVIA II Combi (1Z5)	2004/02	2013/06
OCTAVIA III (5E3, NL3, NR3)	2012/11	
OCTAVIA III Combi (5E5, 5E6)	2012/11	
OCTAVIA IV (NX3)	2020/01	
OCTAVIA IV Combi (NX5)	2019/11	
SUPERB II (3T4)	2008/03	2015/05
SUPERB II Station wagon (3T5)	2009/10	2015/05
YETI (5L)	2009/05	2017/12

BRAKE DISC

- Front Axle
- Vented

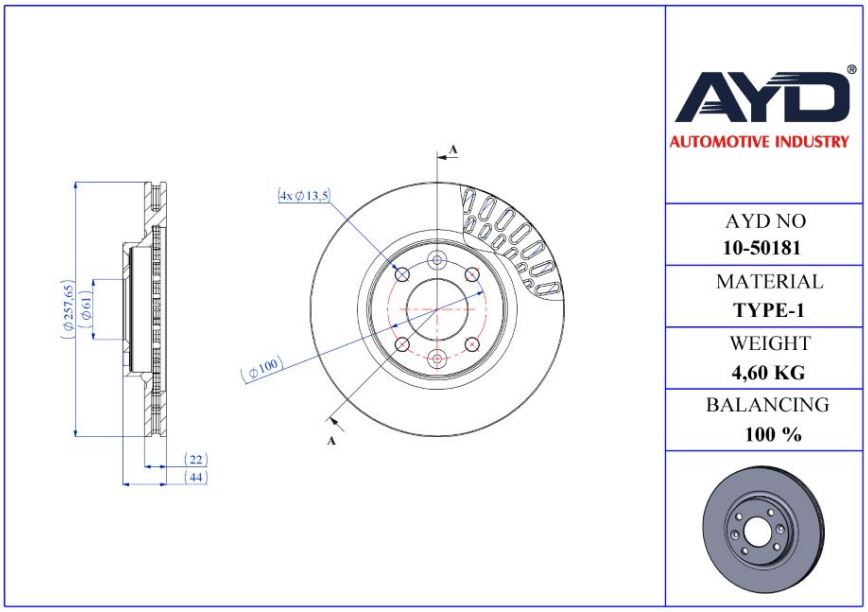

·OEM Standarts
·AYD Quality
·Safety
·Performance

OE:
4534200100

10-50181

Technical Specifications:

Diameter (mm)	Height (mm)	Brake Disc Thickness (mm)	Min. Thickness (mm)	Centering Diameter (mm)	Bolt Hole Circle (mm)	Num. of Holes
257.7	44	22	19.8	61	100	4+2

SMART

MODEL	START Y.	END Y.
FORFOUR Hatchback (453)	2014/07	
FORTWO Cabrio (453)	2015/09	
FORTWO Coupe (453)	2014/07	

BRAKE DISC

- Rear Axle
- Solid

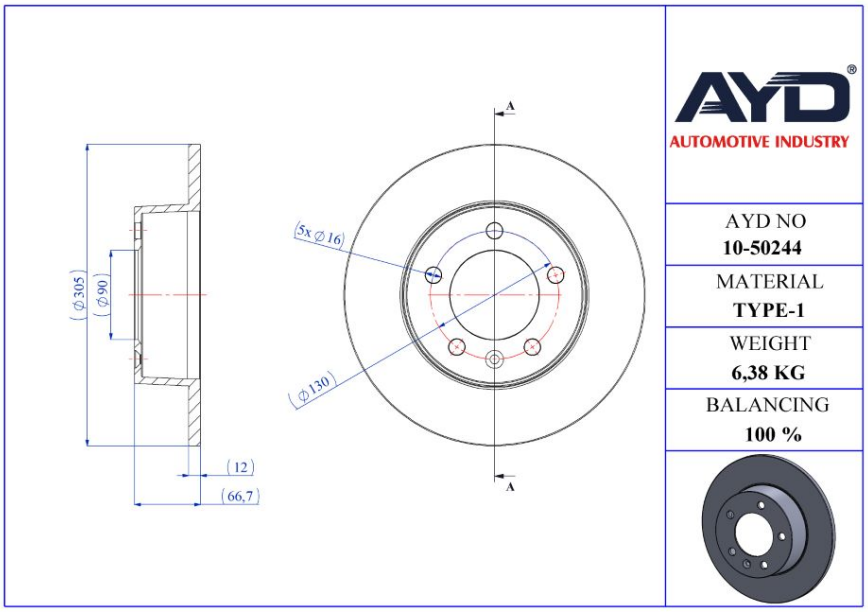

·OEM Standarts
·AYD Quality
·Safety
·Performance

OE:
9111045

10-50244

Technical Specifications:

Diameter (mm)	Height (mm)	Brake Disc Thickness (mm)	Min. Thickness (mm)	Centering Diameter (mm)	Bolt Hole Circle (mm)	Num. of Holes
305	66.7	12	10.5	90	130	5+1

VAUXHALL

MODEL	START Y.	END Y.
MOVANO Mk I (A) Chassis/Cab (X70)	1998/10	2010/12
MOVANO Mk I (A) Combi (X70)	1998/10	2010/05
MOVANO Mk I (A) Van (X70)	1998/10	2010/12

BRAKE DISC

- Rear Axle
- Solid

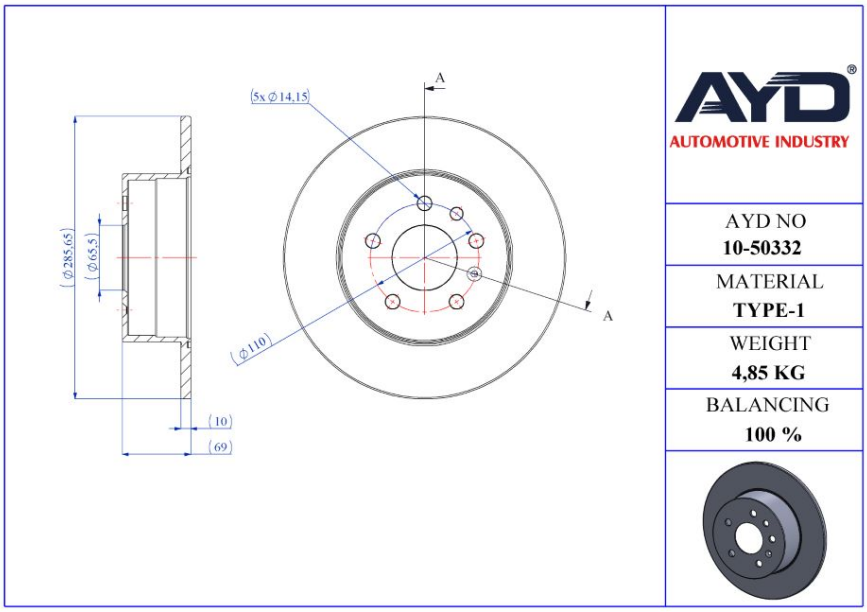

·OEM Standarts
·AYD Quality
·Safety
·Performance

OE:
05 69 118

10-50332

Technical Specifications:

Diameter (mm)	Height (mm)	Brake Disc Thickness (mm)	Min. Thickness (mm)	Centering Diameter (mm)	Bolt Hole Circle (mm)	Num. of Holes
285.65	69	10	8	65.5	110	5+2

VAUXHALL

MODEL	START Y.	END Y.
VECTRA (B) Hatchback (J96)	1995/08	2003/07
VECTRA (B) Sedan (J96)	1995/08	2002/03
VECTRA (B) Station wagon (J96)	1995/08	2002/03

BRAKE DISC

- Front Axle
- Vented

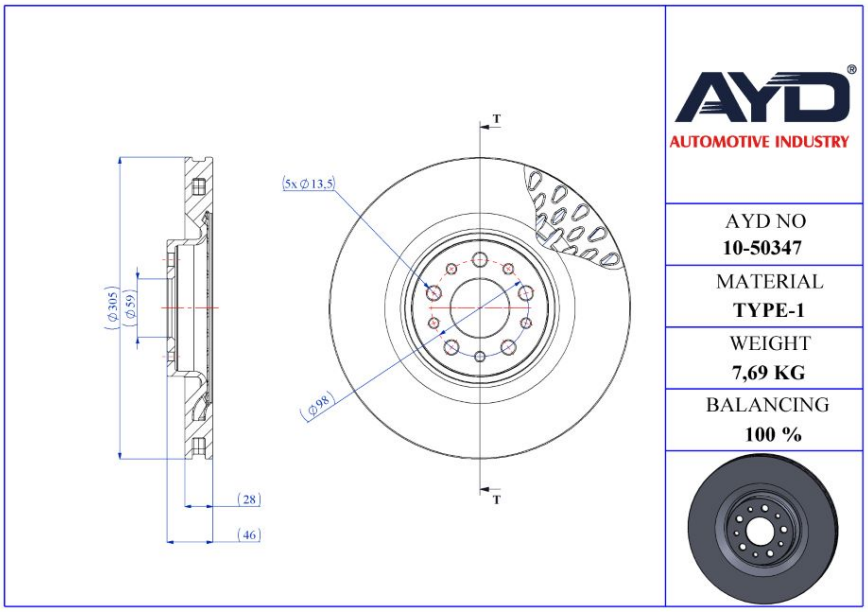

·OEM Standarts
·AYD Quality
·Safety
·Performance

OE:
569 096

10-50347

Technical Specifications:

Diameter (mm)	Height (mm)	Brake Disc Thickness (mm)	Min. Thickness (mm)	Centering Diameter (mm)	Bolt Hole Circle (mm)	Num. of Holes
305	46	28	26	59	98	5+5

VAUXHALL

MODEL	START Y.	END Y.
COMBO Mk III (D) (X12)	2011/11	

BRAKE DISC

- Front Axle
- Vented

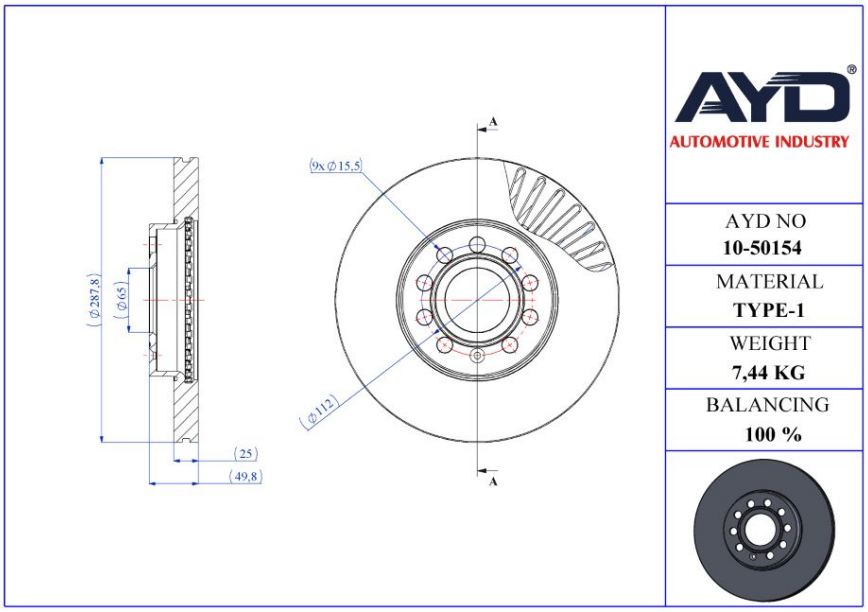

·OEM Standarts
·AYD Quality
·Safety
·Performance

OE:
1K0615301T

10-50154

Technical Specifications:

Diameter (mm)	Height (mm)	Brake Disc Thickness (mm)	Min. Thickness (mm)	Centering Diameter (mm)	Bolt Hole Circle (mm)	Num. of Holes
287.8	49.8	25	22	65	112	9+1

VW

MODEL	START Y.	END Y.
BEETLE (5C1, 5C2)	2011/04	2019/07
BEETLE Cabrio (5C7, 5C8)	2011/12	2019/07
CADDY ALLTRACK (SAA)	2015/05	
CADDY ALLTRACK MPV (SAB)	2015/05	
CADDY III (2KA, 2KH, 2CA, 2CH)	2004/03	2015/05
CADDY III MPV (2KB, 2KJ, 2CB, 2CJ)	2004/03	2015/05
CADDY IV (SAA, SAH)	2015/05	
CADDY IV MPV (SAB, SAJ)	2015/05	
CADDY V (SBA, SBH)	2020/09	
CADDY V MPV (SBB, SBJ)	2020/09	
EOS (1F7, 1F8)	2006/03	2015/08

BRAKE DISC

- Rear Axle
- Solid

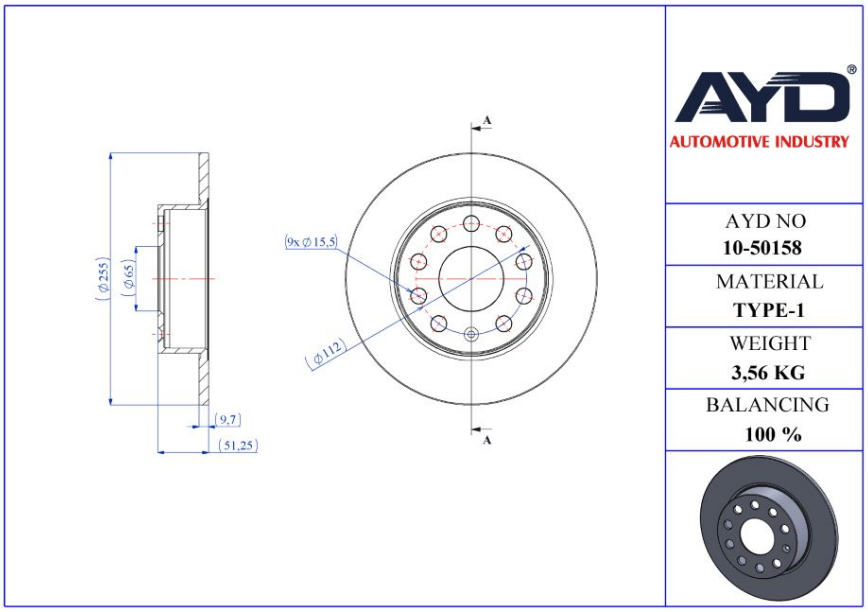

·OEM Standarts
·AYD Quality
·Safety
·Performance

OE:
5C0615601A

10-50158

Technical Specifications:

Diameter (mm)	Height (mm)	Brake Disc Thickness (mm)	Min. Thickness (mm)	Centering Diameter (mm)	Bolt Hole Circle (mm)	Num. of Holes
255	51.25	9.7	7	65	112	9+1

VW

MODEL	START Y.	END Y.
CADDY III (2KA, 2KH, 2CA, 2CH)	2004/03	2015/05
CADDY III MPV (2KB, 2KJ, 2CB, 2CJ)	2004/03	2015/05
EOS (1F7, 1F8)	2006/03	2015/08
GOLF PLUS V (5M1, 521)	2004/12	2013/12
GOLF PLUS Van (521)	2009/01	2014/08
GOLF V (1K1)	2003/10	2010/07
GOLF V Variant (1K5)	2007/01	2009/07
GOLF VI (5K1)	2008/10	2014/12
GOLF VI Cabrio (517)	2011/03	2016/05
GOLF VI Van (5K1_)	2008/10	2012/11
GOLF VI Variant (AJ5)	2009/07	2014/07

BRAKE DISC

- Front Axle
- Vented

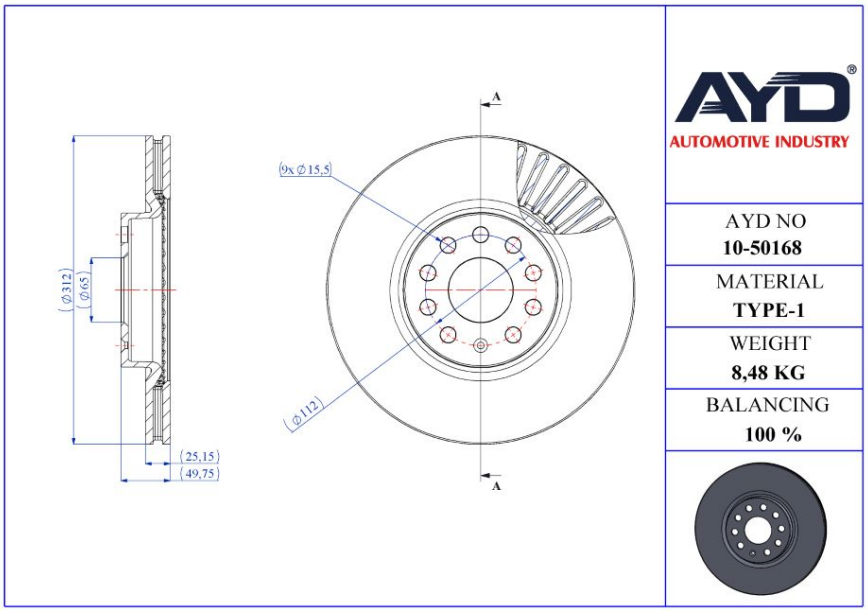

·OEM Standarts
·AYD Quality
·Safety
·Performance

OE:
1K0615301AA

10-50168

Technical Specifications:

Diameter (mm)	Height (mm)	Brake Disc Thickness (mm)	Min. Thickness (mm)	Centering Diameter (mm)	Bolt Hole Circle (mm)	Num. of Holes
312	49.75	25.15	22	65	112	9+1

VW

MODEL	START Y.	END Y.
ARTEON (3H7, 3H8)	2017/03	
BEETLE (5C1, 5C2)	2011/04	2019/07
BEETLE Cabrio (5C7, 5C8)	2011/12	2019/07
CADDY ALLTRACK (SAA)	2015/05	
CADDY ALLTRACK MPV (SAB)	2015/05	
CADDY III (2KA, 2KH, 2CA, 2CH)	2004/03	2015/05
CADDY III MPV (2KB, 2KJ, 2CB, 2CJ)	2004/03	2015/05
CADDY IV (SAA, SAH)	2015/05	
CADDY IV MPV (SAB, SAJ)	2015/05	
CADDY V (SBA, SBH)	2020/09	
CADDY V MPV (SBB, SBJ)	2020/09	

BRAKE DISC

- Rear Axle
- Solid

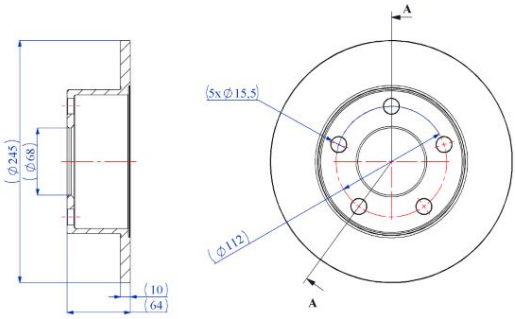

AYD
AUTOMOTIVE INDUSTRY

AYD NO	10-50174
MATERIAL	TYPE-1
WEIGHT	3,69 KG
BALANCING	100 %

·OEM Standarts
·AYD Quality
·Safety
·Performance

OE:
4A0615301A

10-50174

Technical Specifications:

Diameter (mm)	Height (mm)	Brake Disc Thickness (mm)	Min. Thickness (mm)	Centering Diameter (mm)	Bolt Hole Circle (mm)	Num. of Holes
245	64	10	8	68	112	5

VW

MODEL	START Y.	END Y.
PASSAT B3/B4 Variant (3A5, 35I)	1988/02	1997/06
PASSAT B5 (3B2)	1996/08	2001/12
PASSAT B5 Variant (3B5)	1997/05	2001/12
PASSAT B5.5 (3B3)	2000/10	2005/12
PASSAT B5.5 Variant (3B6)	2000/09	2005/08

BRAKE DISC

- Rear Axle
- Solid

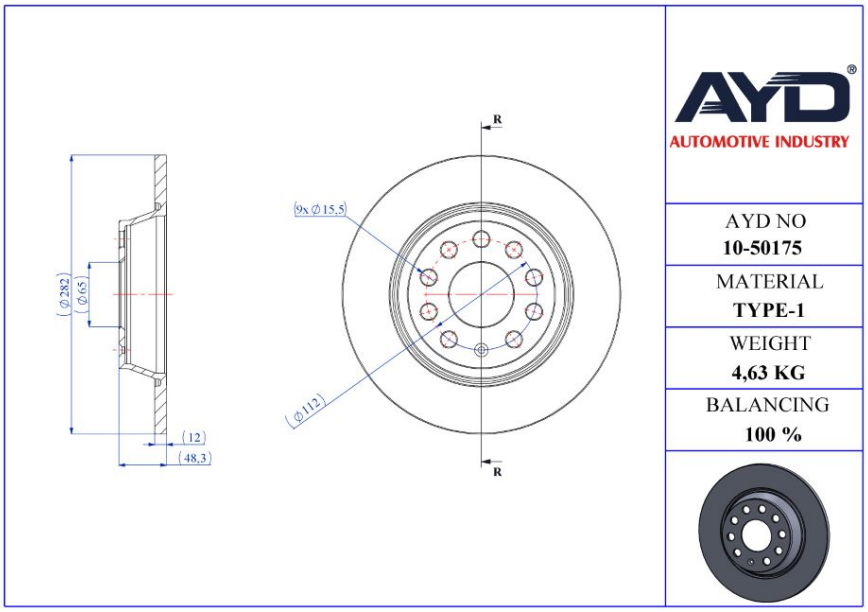

·OEM Standarts
·AYD Quality
·Safety
·Performance

OE:
3CD 615 601

10-50175

Technical Specifications:

Diameter (mm)	Height (mm)	Brake Disc Thickness (mm)	Min. Thickness (mm)	Centering Diameter (mm)	Bolt Hole Circle (mm)	Num. of Holes
282	48.3	12	10	65	112	9+1

VW

MODEL	START Y.	END Y.
CC B7 (358)	2011/11	2016/12
EOS (1F7, 1F8)	2006/03	2015/08
GOLF PLUS V (5M1, 521)	2004/12	2013/12
GOLF PLUS Van (521)	2009/01	2014/08
GOLF V (1K1)	2003/10	2010/07
GOLF V Variant (1K5)	2007/01	2009/07
GOLF VI (5K1)	2008/10	2014/12
GOLF VI Van (5K1_)	2008/10	2012/11
GOLF VI Variant (AJ5)	2009/07	2014/07
JETTA III (1K2)	2004/09	2013/12
JETTA IV (162, 163, AV3, AV2)	2008/01	

BRAKE DISC

- Rear Axle
- Solid

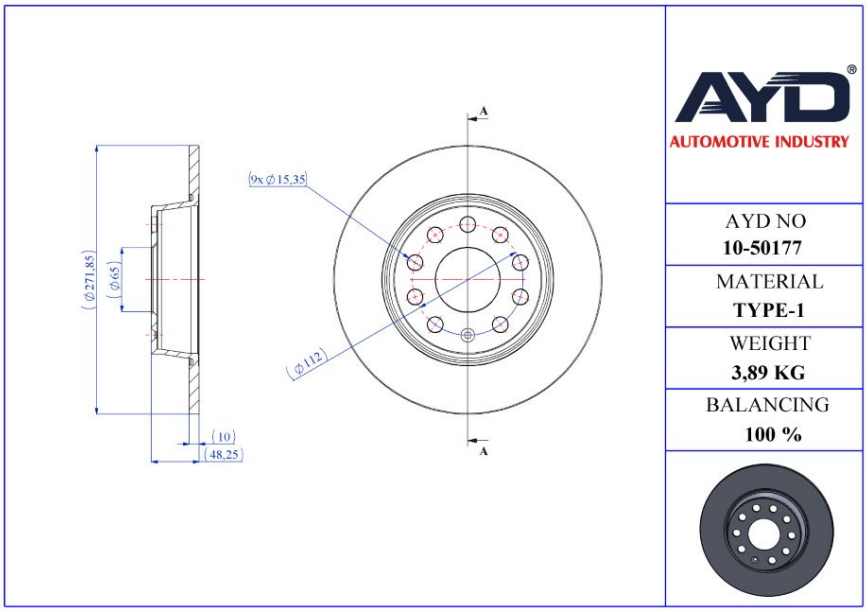

·OEM Standarts
·AYD Quality
·Safety
·Performance

OE:
5QD 615 601

10-50177

Technical Specifications:

Diameter (mm)	Height (mm)	Brake Disc Thickness (mm)	Min. Thickness (mm)	Centering Diameter (mm)	Bolt Hole Circle (mm)	Num. of Holes
271.85	48.25	10	8	65	112	9+1

VW

MODEL	START Y.	END Y.
BEETLE (5C1, 5C2)	2011/04	2019/07
BEETLE Cabrio (5C7, 5C8)	2011/12	2019/07
CADDY ALLTRACK (SAA)	2015/05	
CADDY ALLTRACK MPV (SAB)	2015/05	
CADDY III (2KA, 2KH, 2CA, 2CH)	2004/03	2015/05
CADDY III MPV (2KB, 2KJ, 2CB, 2CJ)	2004/03	2015/05
CADDY IV (SAA, SAH)	2015/05	
CADDY IV MPV (SAB, SAJ)	2015/05	
CADDY V (SBA, SBH)	2020/09	
CADDY V MPV (SBB, SBJ)	2020/09	
DERBY (86C, 80)	1981/08	1984/12