new to range

SPEED TO MARKET SECOND TO NONE

AYD®
AUTOMOTIVE INDUSTRY

BRAKING NEW GROUND

SAFETY | PERFORMANCE | OEM Standards | AYD QUALITY

www.aydtr.com

TÜRKİYE'NİN 500 BÜYÜK SANAYİ KURULUŞU

TİM TÜRKİYE'NİN İLK 1000 İHRACATÇI FİRMASI TOP 1000 EXPORTERS OF TURKEY

JUNE 2022

INDEX

ACURA 3-4
AUDI 5
BUICK 6-8
CHEVROLET 9-13
CHRYSLER 14
CITROEN 15
DODGE 16-19
FIAT 20-21
FORD 22-23
GMC 24
HONDA 25-29
HUMMER 30
HYUNDAI 31-32
INFINITI 33-34
JEEP 35-36
KIA 37
LANCIA 38
LEXUS 39-42
LINCOLN 43
MAZDA 44
NISSAN 45-50
OLDSMOBILE 51
OPEL 52-54
POINTIAC 55-56
SEAT 57
SKODA 58
SUBARU 59
TOYOTA 60-64
VAUXHALL 65-67
VOLKSWAGEN 68-69

BRAKE DISC

FREN DISKI

- Rear Axle
- Solid

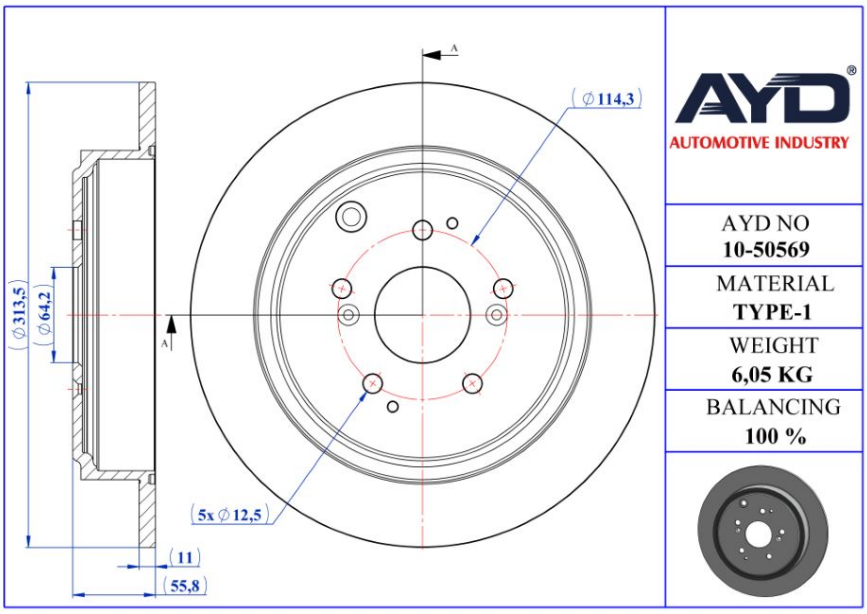

- **Safety**
- **Performance**
- **OEM Standarts**
- **AYD Quality**

OE:
42510S3VA01

10-50569

Technical Specifications:

Diameter (mm)	Height (mm)	Brake Disc Thickness (mm)	Min. Thickness (mm)	Centering Diameter (mm)	Bolt Hole Circle (mm)	Num. of Holes
313.5	55.8	11	9	64.2	114.3	5+5

ACURA

MODEL	START Y.	END Y.
MDX (YD1)	2000/08	2006/09

BRAKE DISC

FREN DISKI

- Rear Axle
- Solid

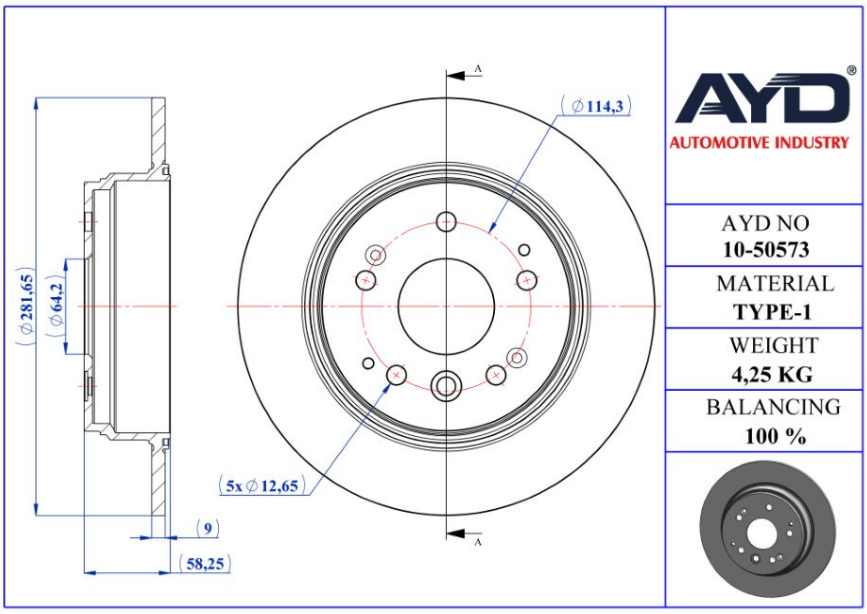

- **Safety**
- **Performance**
- **OEM Standarts**
- **AYD Quality**

OE:
42510SCVA00

10-50573

Technical Specifications:

Diameter (mm)	Height (mm)	Brake Disc Thickness (mm)	Min. Thickness (mm)	Centering Diameter (mm)	Bolt Hole Circle (mm)	Num. of Holes
281.65	58.25	9	7.5	64.2	114.3	5+5

ACURA

MODEL	START Y.	END Y.
TL	1998/10	2003/09

BRAKE DISC

FREN DISKI

- Rear Axle
- Solid

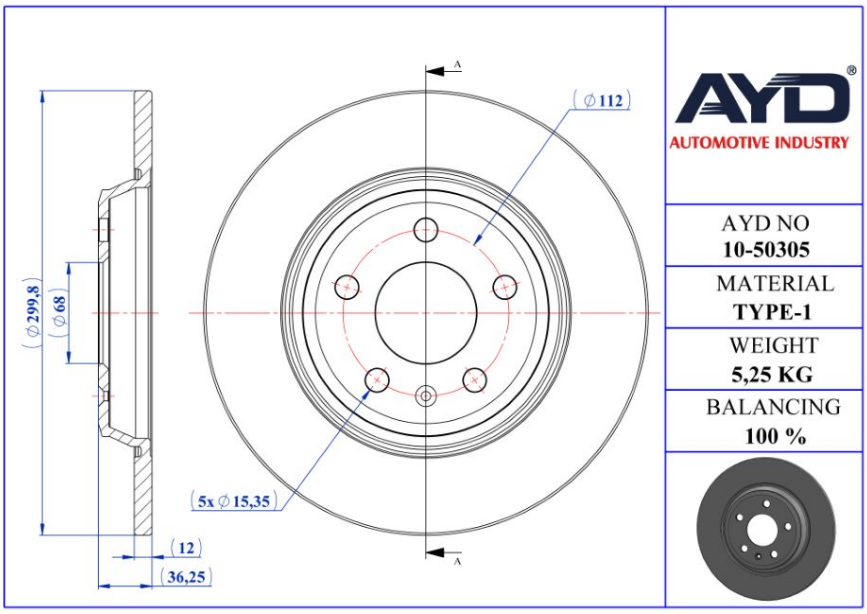

- **Safety**
- **Performance**
- **OEM Standarts**
- **AYD Quality**

OE:
8K0615601J
8K0615601B
8K0615601M

10-50305

Technical Specifications:

Diameter (mm)	Height (mm)	Brake Disc Thickness (mm)	Min. Thickness (mm)	Centering Diameter (mm)	Bolt Hole Circle (mm)	Num. of Holes
299.8	36.25	12	10	68	112	5+1

AUDI

MODEL	START Y.	END Y.
A4 Allroad B8 (8KH)	2009/04	2016/05
A4 B8 (8K2)	2007/08	2015/12
A4 B8 Avant (8K5)	2007/11	2015/12
A5 (8T3)	2007/06	2017/01
A5 Cabrio (8F7)	2009/02	2017/01
A5 Sportback (8TA)	2007/07	2017/01
A6 Allroad C7 (4GH, 4GJ)	2012/01	2018/09
A6 C7 (4G2, 4GC)	2010/11	2018/09
A6 C7 Avant (4G5, 4GD)	2011/05	2018/09
A7 Sportback (4GA, 4GF)	2010/07	2018/05
Q5 (8RB)	2008/11	2017/12

BRAKE DISC

FREN DISKI

- Rear Axle
- Solid

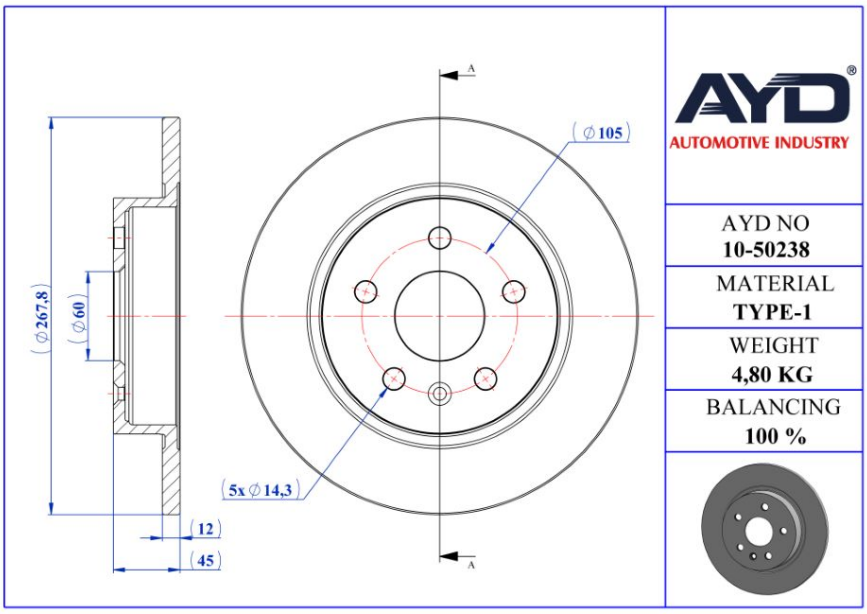

·Safety
·Performance
·OEM Standarts
·AYD Quality

OE:
13502864

10-50238

Technical Specifications:

Diameter (mm)	Height (mm)	Brake Disc Thickness (mm)	Min. Thickness (mm)	Centering Diameter (mm)	Bolt Hole Circle (mm)	Num. of Holes
267.8	45	12	10	60	105	5+1

BUICK

MODEL	START Y.	END Y.
ENCORE SUV	2012/09	

BRAKE DISC

FREN DISKI

- Rear Axle
- Solid

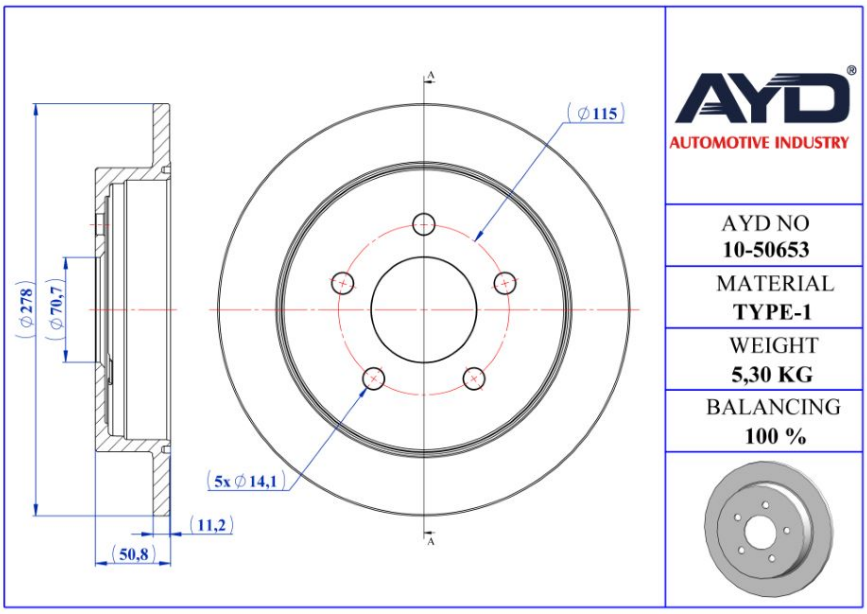

- **Safety**
- **Performance**
- **OEM Standarts**
- **AYD Quality**

OE:
19303830

10-50653

Technical Specifications:

Diameter (mm)	Height (mm)	Brake Disc Thickness (mm)	Min. Thickness (mm)	Centering Diameter (mm)	Bolt Hole Circle (mm)	Num. of Holes
278	50.8	11.2	9	70.7	115	5

BUICK

MODEL	START Y.	END Y.
REGAL (4WF_)	1997/10	2008/12

BRAKE DISC

FREN DISKI

- Rear Axle
- Solid

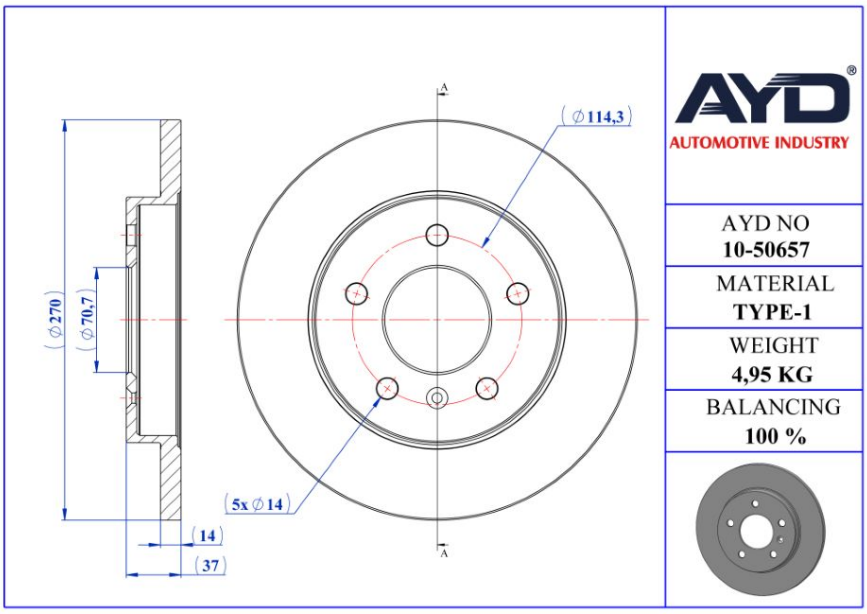

- **Safety**
- **Performance**
- **OEM Standarts**
- **AYD Quality**

OE:
18048699

10-50657

Technical Specifications:

Diameter (mm)	Height (mm)	Brake Disc Thickness (mm)	Min. Thickness (mm)	Centering Diameter (mm)	Bolt Hole Circle (mm)	Num. of Holes
270	37	14	12.5	70.7	114.3	5+1

BUICK

MODEL	START Y.	END Y.
ALLURE Sedan	2004/09	2009/12

BRAKE DISC

FREN DISKI

- Rear Axle
- Solid

- **Safety**
- **Performance**
- **OEM Standarts**
- **AYD Quality**

OE:
13502136
13502864

10-50238

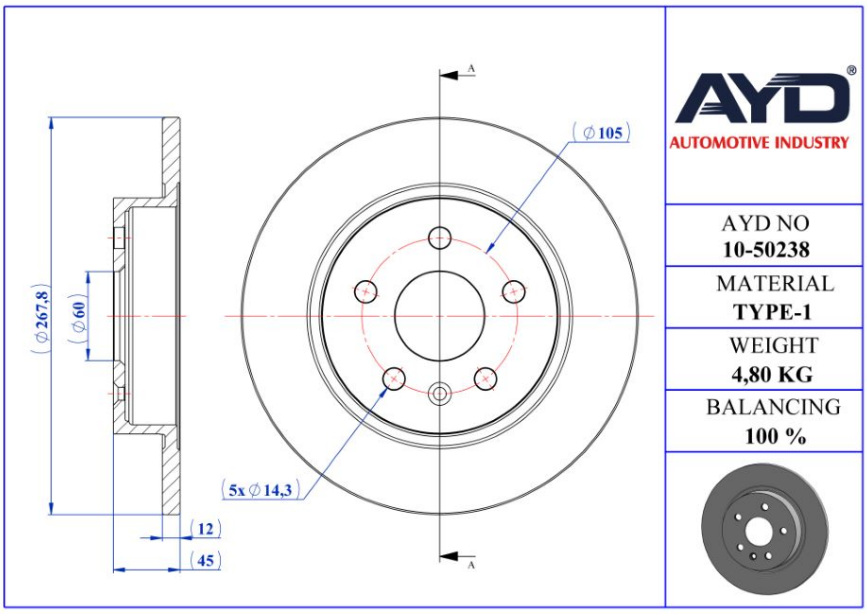

Technical Specifications:

Diameter (mm)	Height (mm)	Brake Disc Thickness (mm)	Min. Thickness (mm)	Centering Diameter (mm)	Bolt Hole Circle (mm)	Num. of Holes
267.8	45	12	10	60	105	5+1

CHEVROLET

MODEL	START Y.	END Y.
CRUZE (J300)	2009/05	
CRUZE Hatchback (J305)	2010/12	
CRUZE Station Wagon (J308)	2012/08	
TRAX	2012/12	

BRAKE DISC

FREN DISKI

- Rear Axle
- Solid

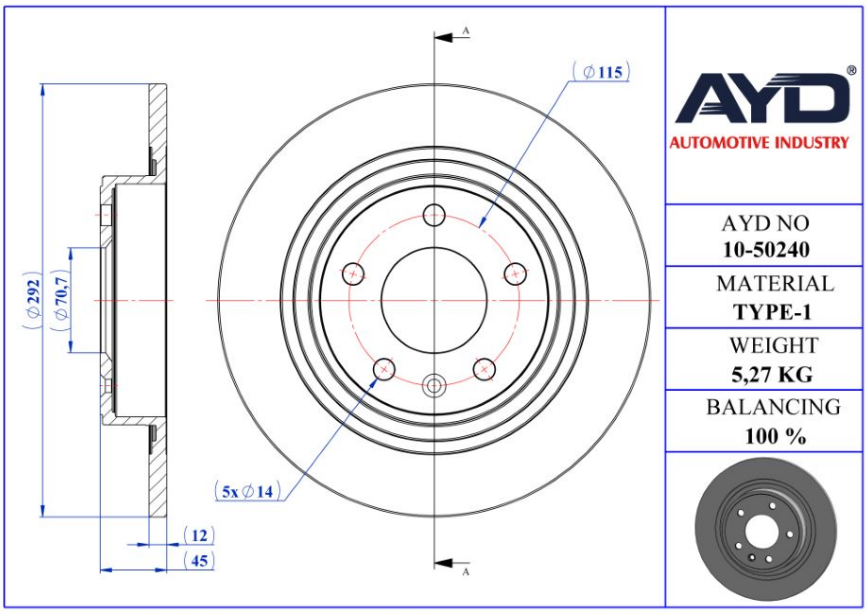

- **Safety**
- **Performance**
- **OEM Standarts**
- **AYD Quality**

OE:
3504280
13502139

10-50240

Technical Specifications:

Diameter (mm)	Height (mm)	Brake Disc Thickness (mm)	Min. Thickness (mm)	Centering Diameter (mm)	Bolt Hole Circle (mm)	Num. of Holes
292	45	12	10	70.7	115	5+1

CHEVROLET

MODEL	START Y.	END Y.
CRUZE (J300)	2009/05	
CRUZE Hatchback (J305)	2010/12	

BRAKE DISC

FREN DISKI

- Rear Axle
- Vented

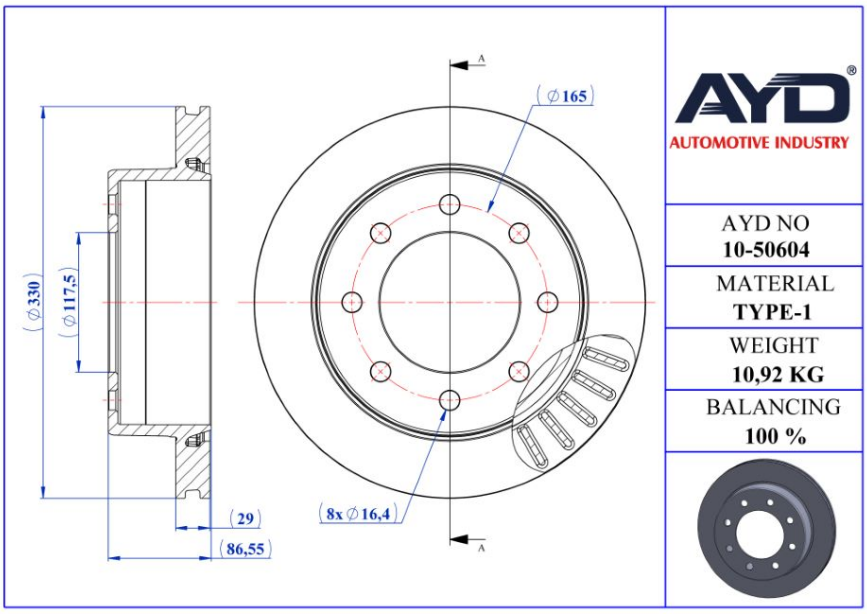

- **Safety**
- **Performance**
- **OEM Standarts**
- **AYD Quality**

OE:
15712801

10-50604

Technical Specifications:

Diameter (mm)	Height (mm)	Brake Disc Thickness (mm)	Min. Thickness (mm)	Centering Diameter (mm)	Bolt Hole Circle (mm)	Num. of Holes
330	86.55	29	26.5	117.5	165	8

CHEVROLET

MODEL	START Y.	END Y.
EXPRESS 2500 Extended Cargo Van	2002/09	
EXPRESS 2500 Standard Passenger Van	2002/09	
EXPRESS 3500 Extended Passenger Van	2002/09	
EXPRESS 3500 Standard Cargo Van	2002/09	
SILVERADO 1500 HD Crew Cab Pickup	2000/09	2007/12
SILVERADO 2500 Cab & Chassis	1998/09	2005/12

BRAKE DISC

FREN DISKI

- Rear Axle
- Solid

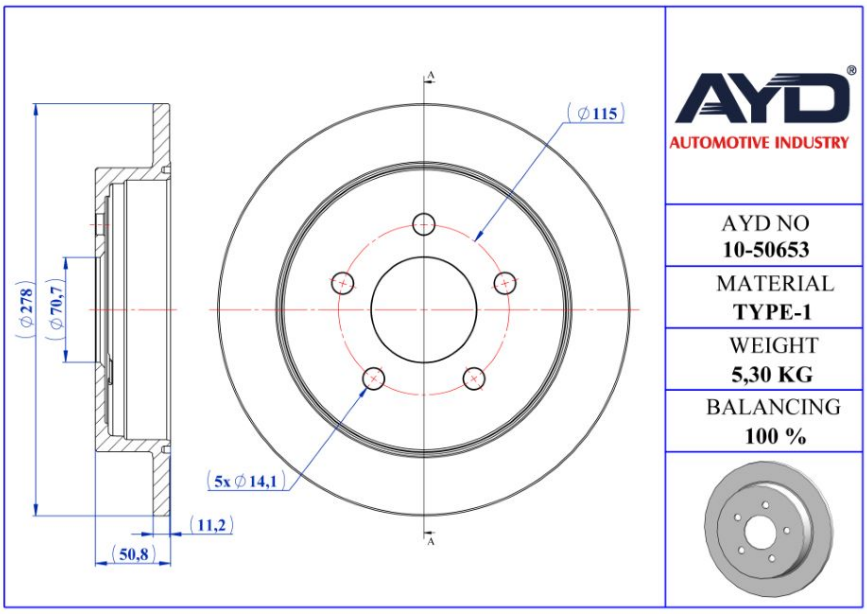

- **Safety**
- **Performance**
- **OEM Standarts**
- **AYD Quality**

OE:
18021354
18038815
18060232

10-50653

Technical Specifications:

Diameter (mm)	Height (mm)	Brake Disc Thickness (mm)	Min. Thickness (mm)	Centering Diameter (mm)	Bolt Hole Circle (mm)	Num. of Holes
278	50.8	11.2	9	70.7	115	5

CHEVROLET

MODEL	START Y.	END Y.
IMPALA Sedan	1999/01	2005/12
MONTE CARLO Coupe	1999/09	2007/12

BRAKE DISC

FREN DISKI

- Rear Axle
- Solid

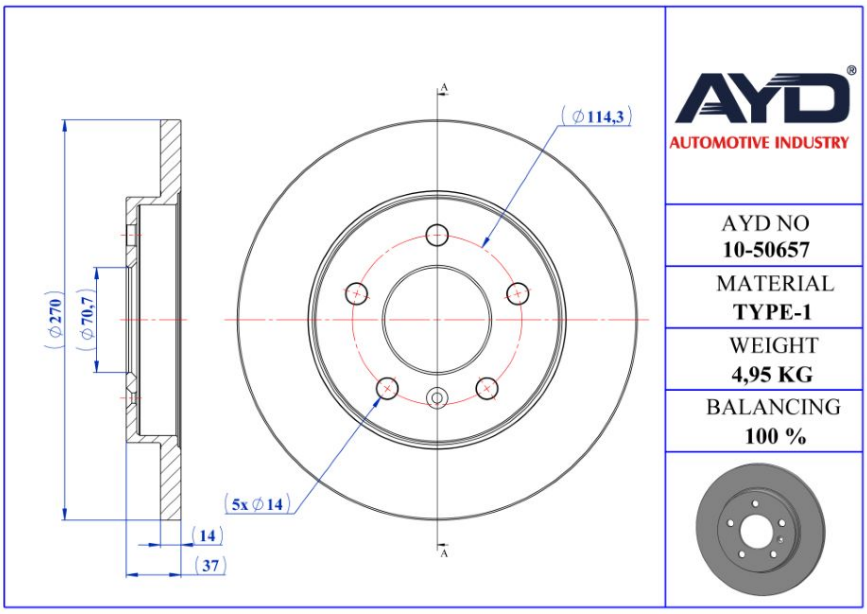

- **Safety**
- **Performance**
- **OEM Standarts**
- **AYD Quality**

OE:
18048699
20879455

10-50657

Technical Specifications:

Diameter (mm)	Height (mm)	Brake Disc Thickness (mm)	Min. Thickness (mm)	Centering Diameter (mm)	Bolt Hole Circle (mm)	Num. of Holes
270	37	14	12.5	70.7	114.3	5+1

CHEVROLET

MODEL	START Y.	END Y.
IMPALA Sedan	2005/01	2016/12

BRAKE DISC

FREN DISKI

- Rear Axle
- Solid

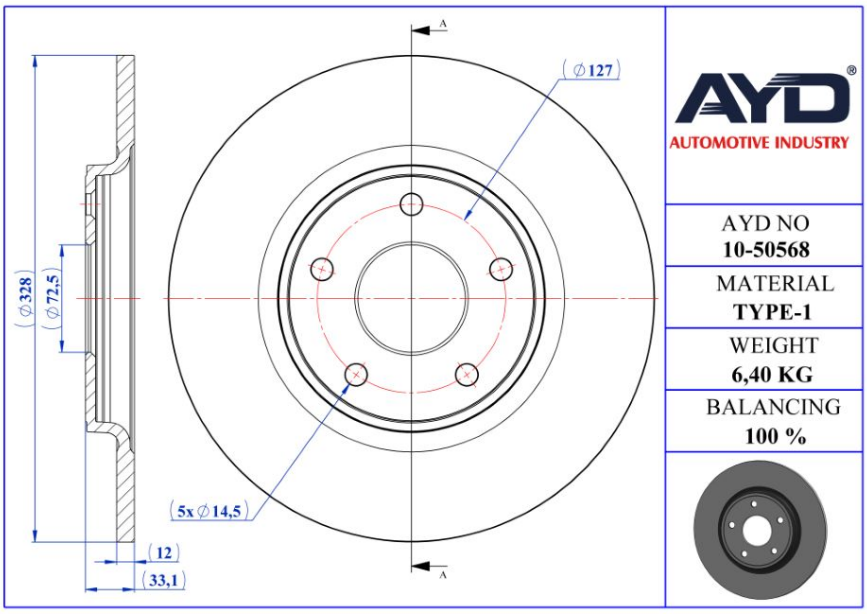

- **Safety**
- **Performance**
- **OEM Standarts**
- **AYD Quality**

OE:
4779713AB

10-50568

Technical Specifications:

Diameter (mm)	Height (mm)	Brake Disc Thickness (mm)	Min. Thickness (mm)	Centering Diameter (mm)	Bolt Hole Circle (mm)	Num. of Holes
328	33.1	12	10.4	72.5	127	5

CHRYSLER

MODEL	START Y.	END Y.
GRAND VOYAGER V (RT)	2007/10	

BRAKE DISC

FREN DISKI

- Rear Axle
- Solid

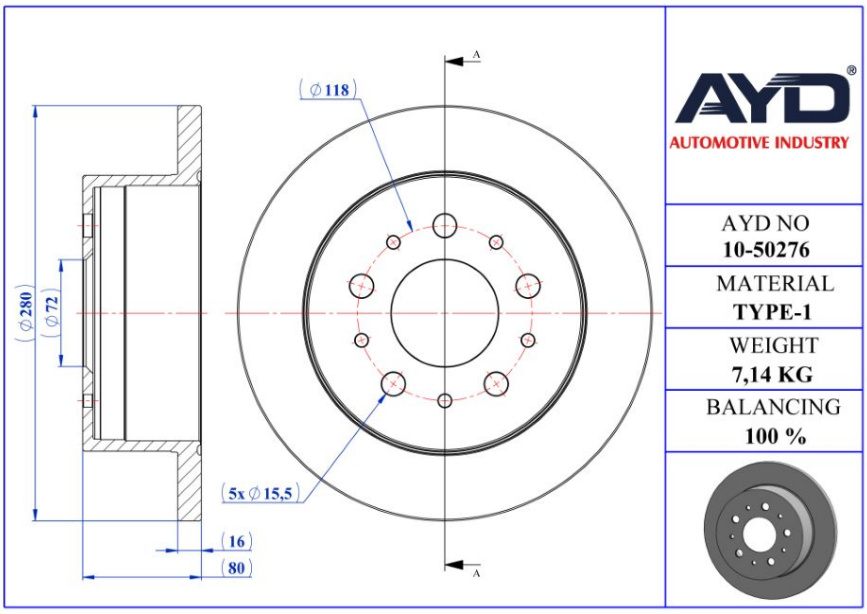

- **Safety**
- **Performance**
- **OEM Standarts**
- **AYD Quality**

OE:
424931
4249A1
4249K7

10-50276

Technical Specifications:

Diameter (mm)	Height (mm)	Brake Disc Thickness (mm)	Min. Thickness (mm)	Centering Diameter (mm)	Bolt Hole Circle (mm)	Num. of Holes
280	80	16	14.2	72	118	5+5

CITROËN

MODEL	START Y.	END Y.
JUMPER Minibus/Bus	2006/04	
JUMPER Panelvan/Van	2006/04	
JUMPER Platform	2006/04	

BRAKE DISC

FREN DISKI

- Rear Axle
- Solid

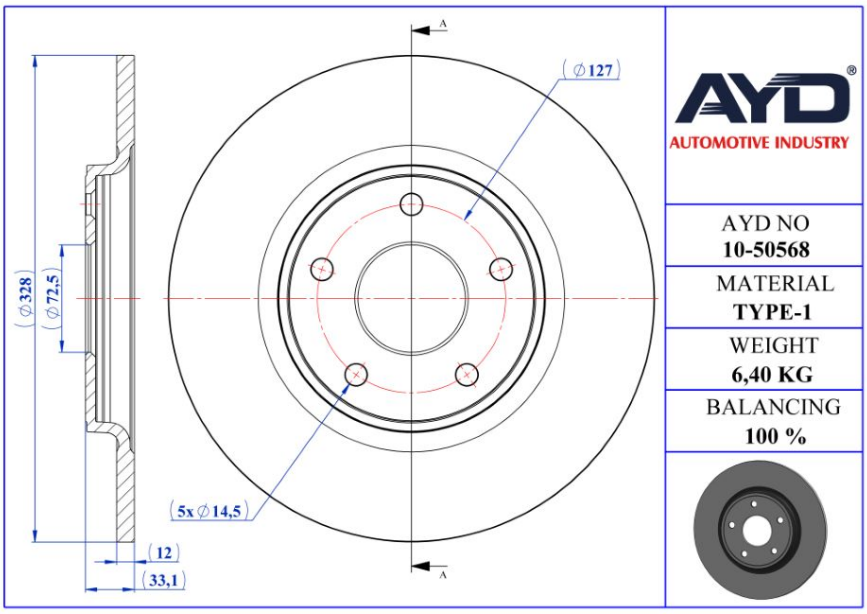

- **Safety**
- **Performance**
- **OEM Standarts**
- **AYD Quality**

OE:
4779713AB

10-50568

Technical Specifications:

Diameter (mm)	Height (mm)	Brake Disc Thickness (mm)	Min. Thickness (mm)	Centering Diameter (mm)	Bolt Hole Circle (mm)	Num. of Holes
328	33.1	12	10.4	72.5	127	5

DODGE

MODEL	START Y.	END Y.
JOURNEY	2008/06	

BRAKE DISC

FREN DISKI

- Rear Axle
- Solid

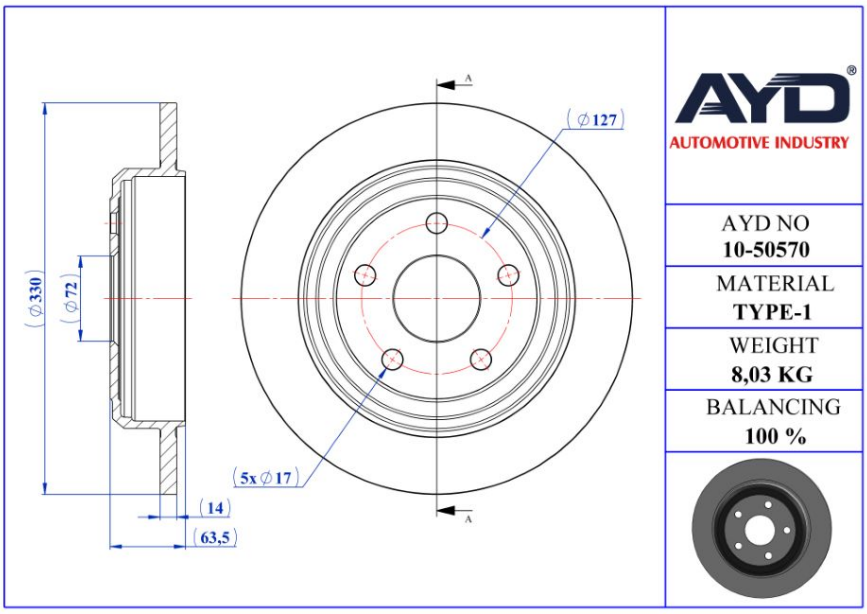

- **Safety**
- **Performance**
- **OEM Standarts**
- **AYD Quality**

OE:
52124763AD

10-50570

Technical Specifications:

Diameter (mm)	Height (mm)	Brake Disc Thickness (mm)	Min. Thickness (mm)	Centering Diameter (mm)	Bolt Hole Circle (mm)	Num. of Holes
330	63.5	14	12.5	72	127	5

DODGE

MODEL	START Y.	END Y.
DURANGO (WD)	2010/12	

BRAKE DISC

FREN DISKI

- Front Axle
- Vented

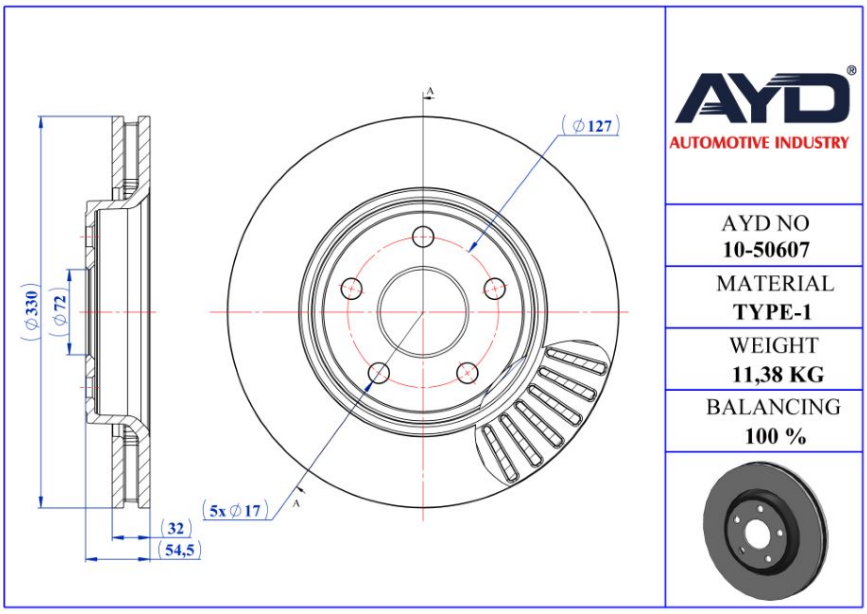

- **Safety**
- **Performance**
- **OEM Standarts**
- **AYD Quality**

OE:
52124762AD

10-50607

Technical Specifications:

Diameter (mm)	Height (mm)	Brake Disc Thickness (mm)	Min. Thickness (mm)	Centering Diameter (mm)	Bolt Hole Circle (mm)	Num. of Holes
330	54.5	32	30.5	72	127	5

DODGE

MODEL	START Y.	END Y.
DURANGO (WD)	2010/12	

BRAKE DISC

FREN DISKI

- Rear Axle
- Solid

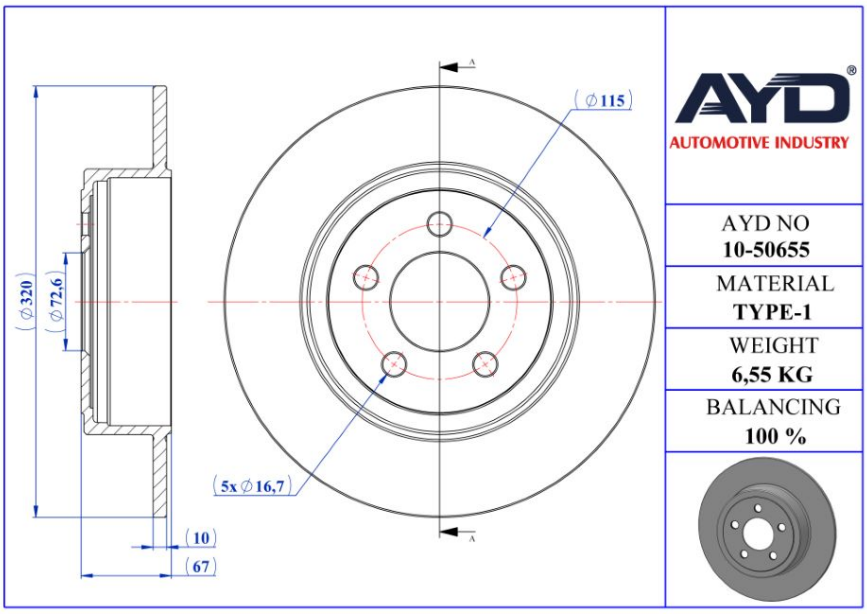

- **Safety**
- **Performance**
- **OEM Standarts**
- **AYD Quality**

OE:
4779208AB
4779208AD
4779208AE

10-50655

Technical Specifications:

Diameter (mm)	Height (mm)	Brake Disc Thickness (mm)	Min. Thickness (mm)	Centering Diameter (mm)	Bolt Hole Circle (mm)	Num. of Holes
320	67	10	8.5	72.6	115	5

DODGE

MODEL	START Y.	END Y.
CHALLENGER Coupe	2007/09	
CHARGER	2011/01	

BRAKE DISC

FREN DISKI

- Rear Axle
- Solid

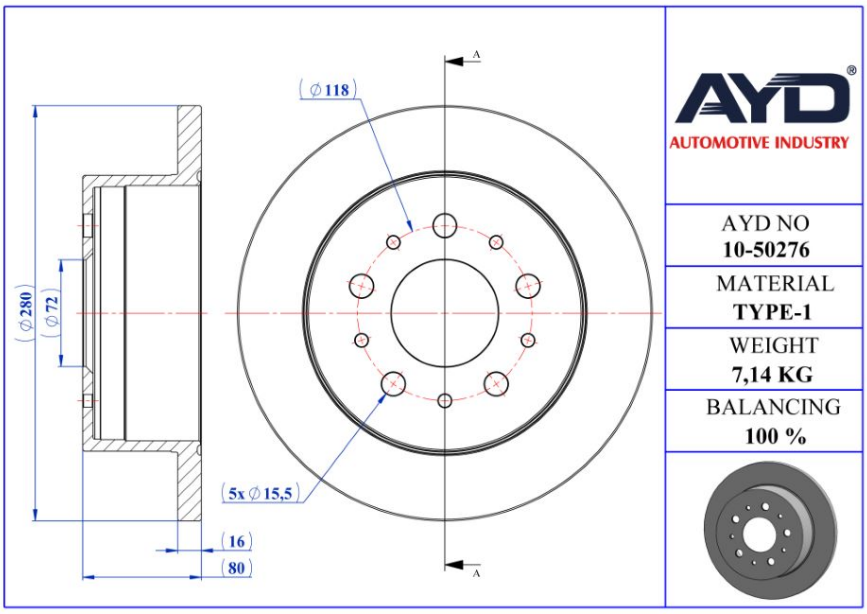

- **Safety**
- **Performance**
- **OEM Standarts**
- **AYD Quality**

OE:
51848617

10-50276

Technical Specifications:

Diameter (mm)	Height (mm)	Brake Disc Thickness (mm)	Min. Thickness (mm)	Centering Diameter (mm)	Bolt Hole Circle (mm)	Num. of Holes
280	80	16	14.2	72	118	5+5

FIAT

MODEL	START Y.	END Y.
DUCATO Minibus/Bus (250_, 290_)	2006/07	
DUCATO Panelvan/Van (250_, 290_)	2006/07	
DUCATO Platform (250_, 290_)	2006/07	

BRAKE DISC

FREN DISKI

- Rear Axle
- Solid

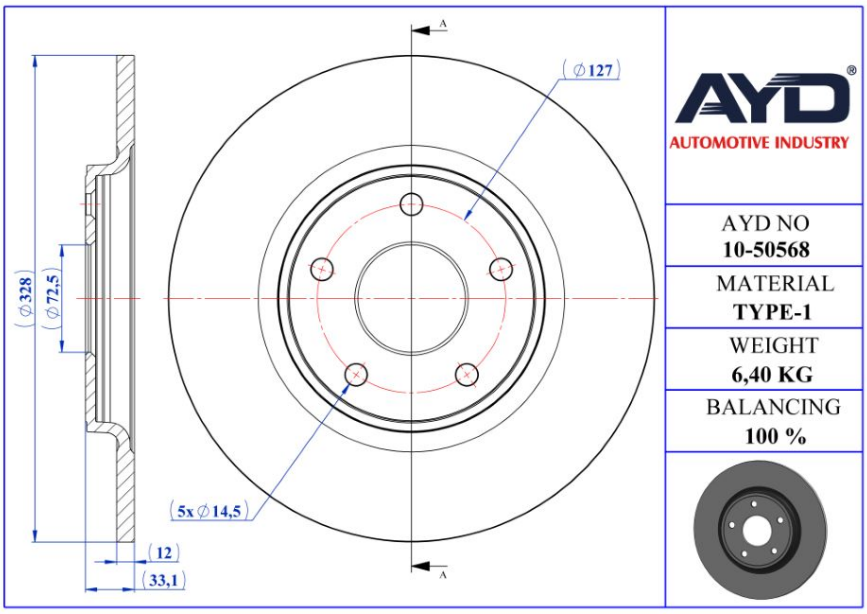

- **Safety**
- **Performance**
- **OEM Standarts**
- **AYD Quality**

OE:
K04779713AB
K68227800AA

10-50568

Technical Specifications:

Diameter (mm)	Height (mm)	Brake Disc Thickness (mm)	Min. Thickness (mm)	Centering Diameter (mm)	Bolt Hole Circle (mm)	Num. of Holes
328	33.1	12	10.4	72.5	127	5

FIAT

MODEL	START Y.	END Y.
FREEMONT (345_)	2011/08	

BRAKE DISC

FREN DISKI

- Front Axle
- Vented

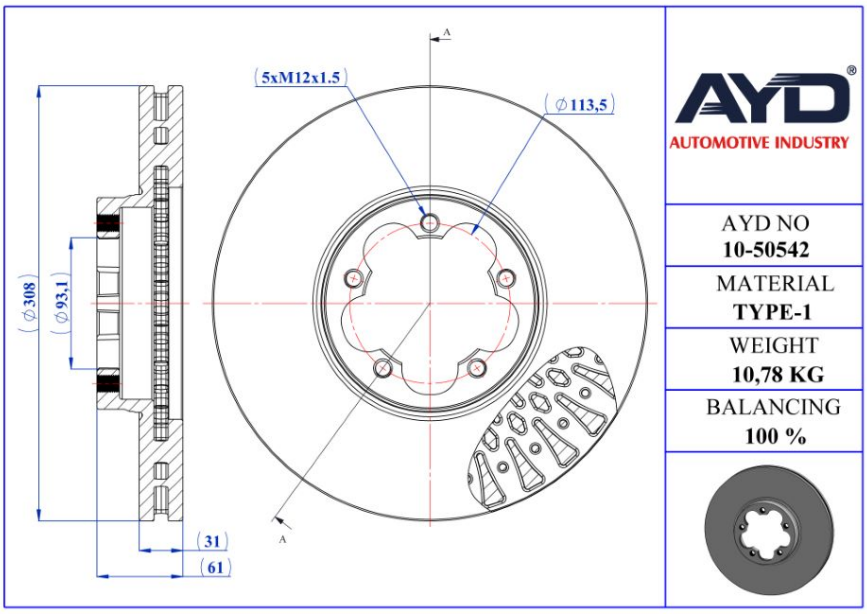

- **Safety**
- **Performance**
- **OEM Standarts**
- **AYD Quality**

OE:
BK311125AC
CK4Z1125B
1812200

10-50542

Technical Specifications:

Diameter (mm)	Height (mm)	Brake Disc Thickness (mm)	Min. Thickness (mm)	Centering Diameter (mm)	Bolt Hole Circle (mm)	Num. of Holes
308	61	31	28	93.1	113.5	5

FORD

MODEL	START Y.	END Y.
TRANSIT V363 Minibus/Bus (FAD, FBD)	2013/08	
TRANSIT V363 Panelvan/Van (FCD, FDD)	2013/08	
TRANSIT V363 Platform (FED, FFD)	2013/08	

BRAKE DISC

FREN DISKI

- Rear Axle
- Solid

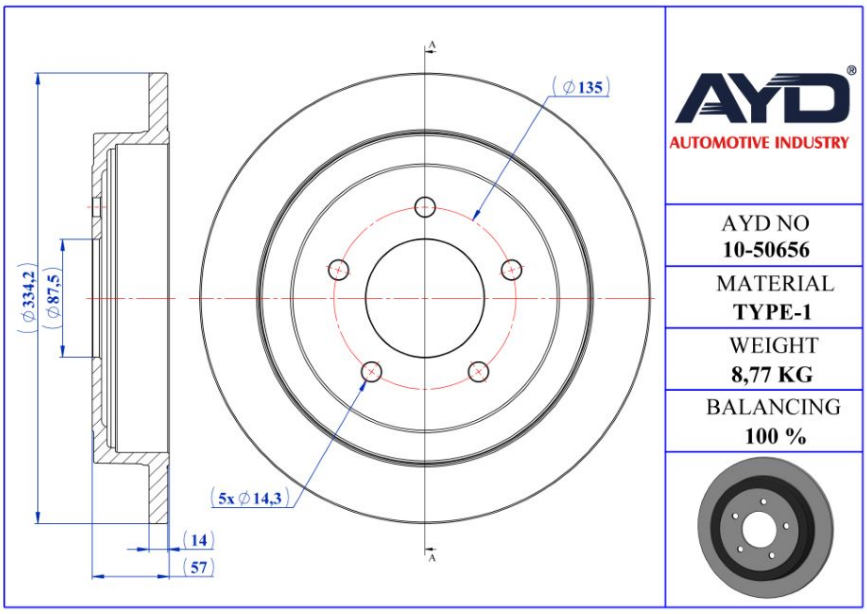

- **Safety**
- **Performance**
- **OEM Standarts**
- **AYD Quality**

OE:
XL3Z2C026DA

10-50656

Technical Specifications:

Diameter (mm)	Height (mm)	Brake Disc Thickness (mm)	Min. Thickness (mm)	Centering Diameter (mm)	Bolt Hole Circle (mm)	Num. of Holes
334.2	57	14	12	87.5	135	5

FORD USA

MODEL	START Y.	END Y.
F-150 Crew Cab Pickup	1996/09	2003/12
F-150 Extended Cab Pickup	1996/09	2003/12

BRAKE DISC

FREN DISKI

- Rear Axle
- Vented

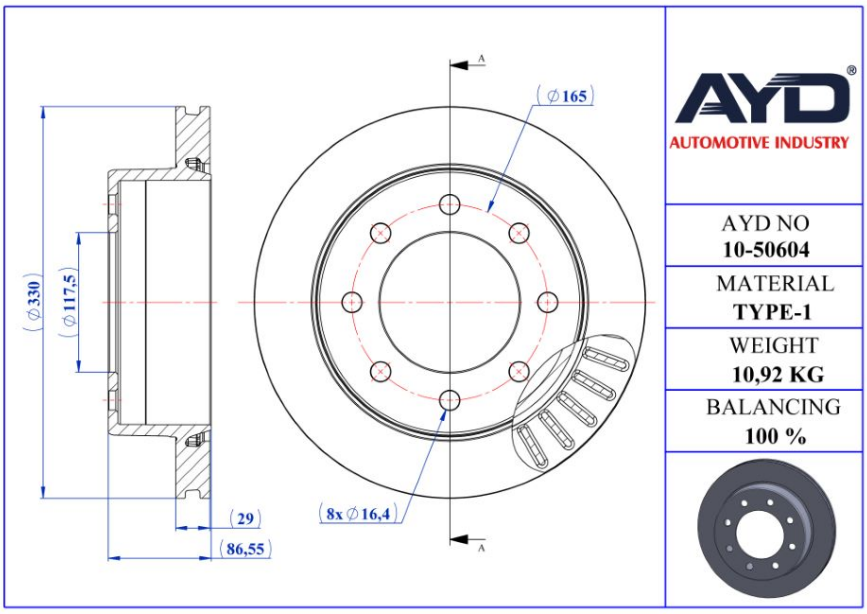

- **Safety**
- **Performance**
- **OEM Standarts**
- **AYD Quality**

OE:
15127537

10-50604

Technical Specifications:

Diameter (mm)	Height (mm)	Brake Disc Thickness (mm)	Min. Thickness (mm)	Centering Diameter (mm)	Bolt Hole Circle (mm)	Num. of Holes
330	86.55	29	26.5	117.5	165	8

GMC

MODEL	START Y.	END Y.
SAVANA 2500 Extended Cargo Van	2002/09	
SAVANA 2500 Standard Cargo Van	2002/09	
SAVANA 2500 Standard Passenger Van	2002/09	
SAVANA 3500 Cutaway Van	2002/09	
SAVANA 3500 Extended Cargo Van	2002/09	
SAVANA 3500 Extended Passenger Van	2002/09	
SAVANA 3500 Standard Cargo Van	2002/09	
SAVANA 3500 Standard Passenger Van	2002/09	
SIERRA 1500 Crew Cab Pickup	1997/09	2007/12
SIERRA 1500 HD Crew Cab Pickup	2000/09	2007/12
SIERRA 2500 Cab & Chassis	1997/09	2006/12

BRAKE DISC

FREN DISKI

- Rear Axle
- Solid

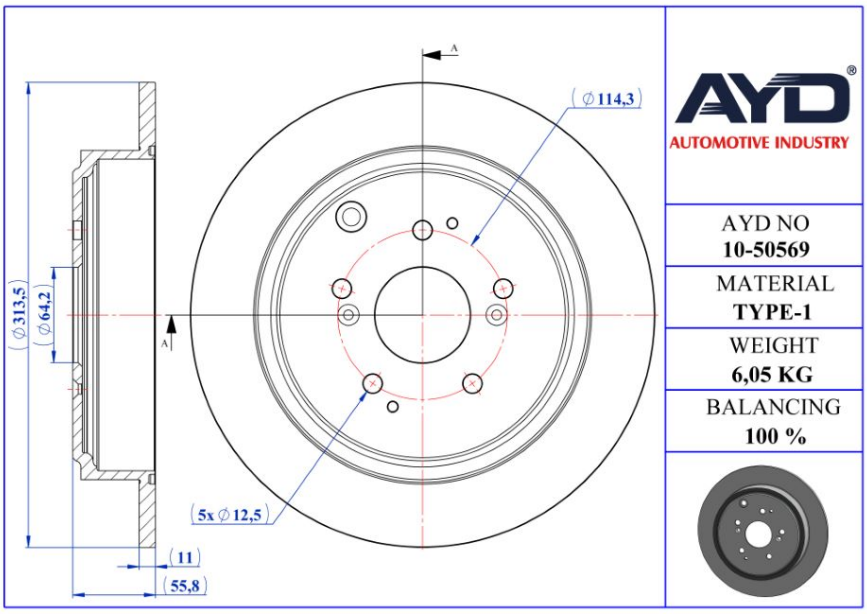

- **Safety**
- **Performance**
- **OEM Standarts**
- **AYD Quality**

OE:
42510S3VA01

10-50569

Technical Specifications:

Diameter (mm)	Height (mm)	Brake Disc Thickness (mm)	Min. Thickness (mm)	Centering Diameter (mm)	Bolt Hole Circle (mm)	Num. of Holes
313.5	55.8	11	9	64.2	114.3	5+5

HONDA

MODEL	START Y.	END Y.
PILOT	2002/09	2008/07

BRAKE DISC

FREN DISKI

- Rear Axle
- Solid

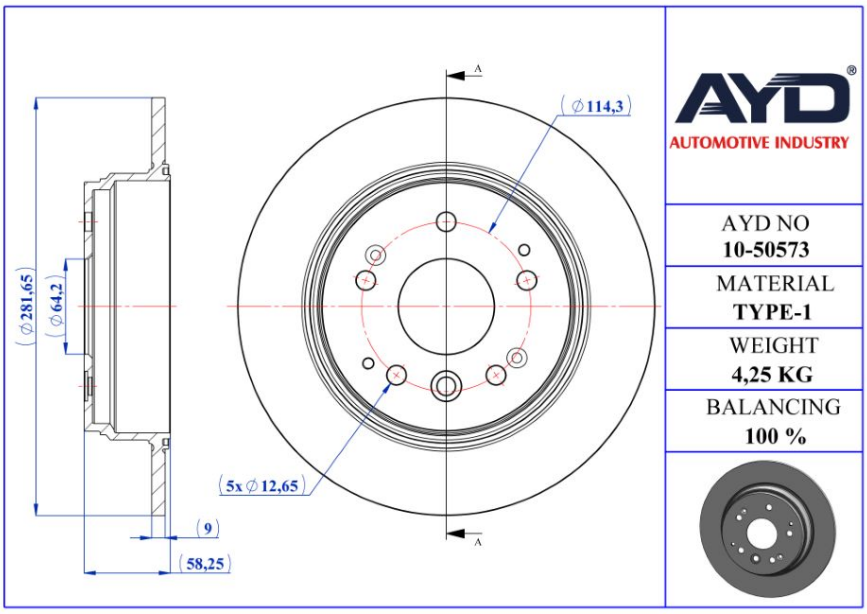

- **Safety**
- **Performance**
- **OEM Standarts**
- **AYD Quality**

OE:
42510SCVA00
42510S0KA00

10-50573

Technical Specifications:

Diameter (mm)	Height (mm)	Brake Disc Thickness (mm)	Min. Thickness (mm)	Centering Diameter (mm)	Bolt Hole Circle (mm)	Num. of Holes
281.65	58.25	9	7.5	64.2	114.3	5+5

HONDA

MODEL	START Y.	END Y.
ELEMENT (YH)	2002/07	2011/12

BRAKE DISC

FREN DISKI

- Rear Axle
- Solid

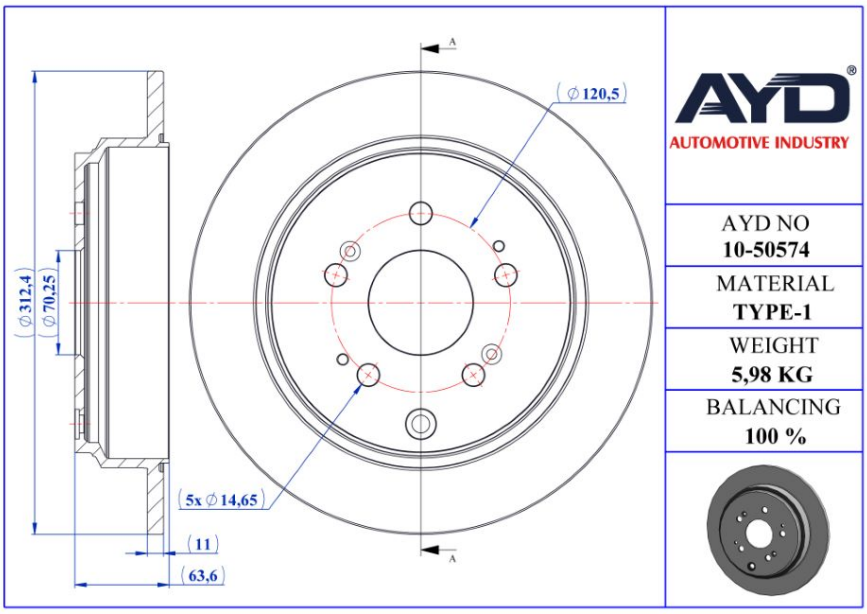

- **Safety**
- **Performance**
- **OEM Standarts**
- **AYD Quality**

OE:
42510SHJA00

10-50574

Technical Specifications:

Diameter (mm)	Height (mm)	Brake Disc Thickness (mm)	Min. Thickness (mm)	Centering Diameter (mm)	Bolt Hole Circle (mm)	Num. of Holes
312.4	63.6	11	9	70.25	120.5	5+5

HONDA

MODEL	START Y.	END Y.
ODYSSEY MPV (RL3, RL4)	2004/09	2010/12

BRAKE DISC

FREN DISKI

- Front Axle
- Vented

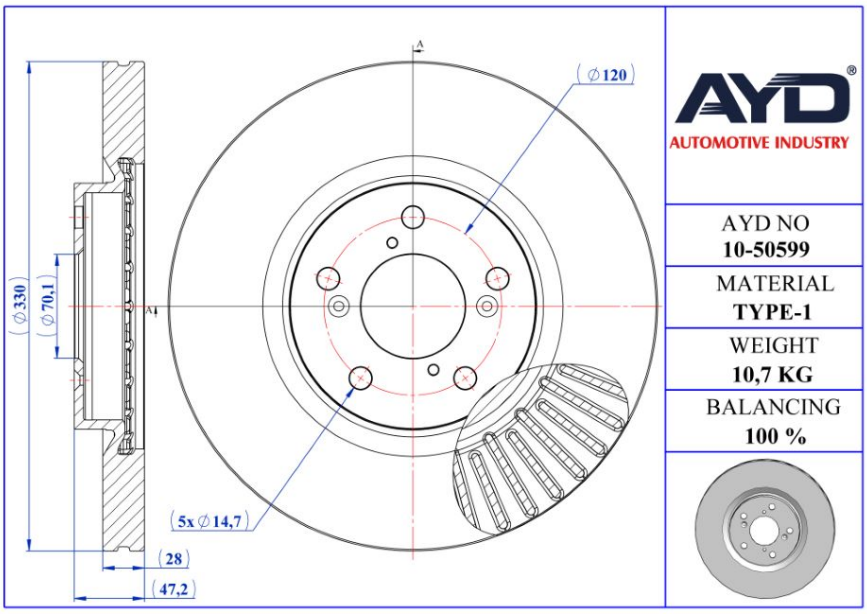

·Safety
·Performance
·OEM Standarts
·AYD Quality

OE:
45251STXH01
45251STXA00
45251STXA01

10-50599

Technical Specifications:

Diameter (mm)	Height (mm)	Brake Disc Thickness (mm)	Min. Thickness (mm)	Centering Diameter (mm)	Bolt Hole Circle (mm)	Num. of Holes
330	47.2	28	26	70.1	120	5+4

HONDA

MODEL	START Y.	END Y.
PILOT	2008/09	

BRAKE DISC

FREN DISKI

- Front Axle
- Vented

- **Safety**
- **Performance**
- **OEM Standarts**
- **AYD Quality**

OE:
45251SHJA00

10-50606

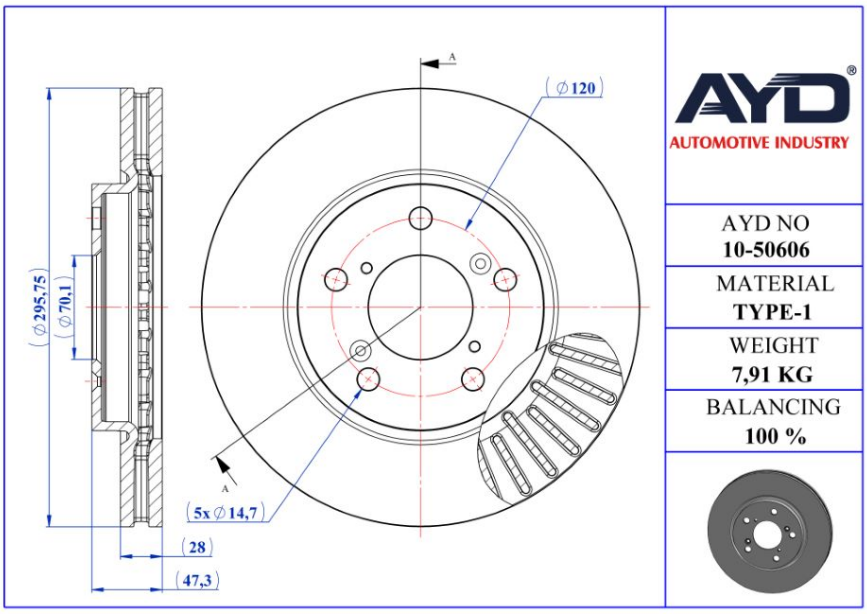

Technical Specifications:

Diameter (mm)	Height (mm)	Brake Disc Thickness (mm)	Min. Thickness (mm)	Centering Diameter (mm)	Bolt Hole Circle (mm)	Num. of Holes
295.75	47.3	28	26	70.1	120	5+4

HONDA

MODEL	START Y.	END Y.
ODYSSEY MPV (RL3, RL4)	2004/09	2010/12

BRAKE DISC

FREN DISKI

- Rear Axle
- Vented

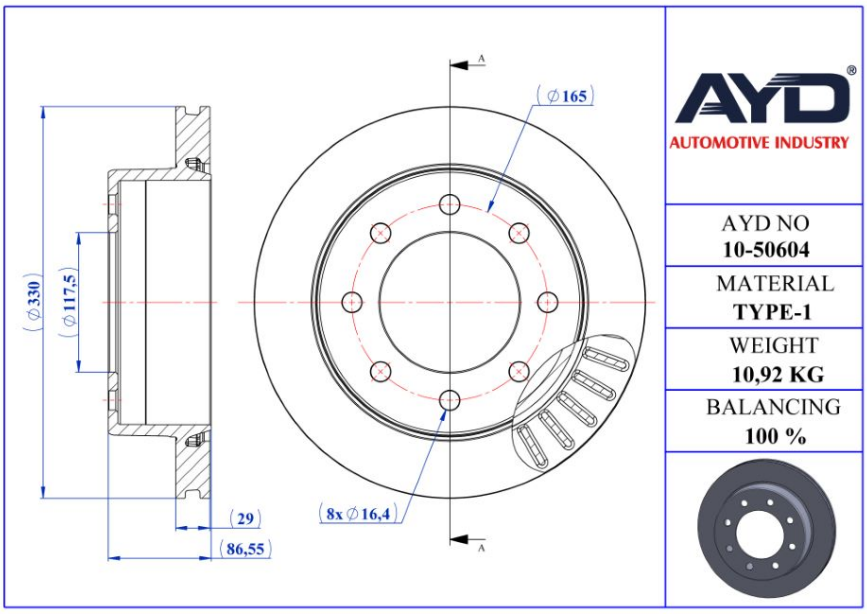

- **Safety**
- **Performance**
- **OEM Standarts**
- **AYD Quality**

OE:
15712801

10-50604

Technical Specifications:

Diameter (mm)	Height (mm)	Brake Disc Thickness (mm)	Min. Thickness (mm)	Centering Diameter (mm)	Bolt Hole Circle (mm)	Num. of Holes
330	86.55	29	26.5	117.5	165	8

HUMMER

MODEL	START Y.	END Y.
HUMMER H2	2002/08	

BRAKE DISC

FREN DISKI

- Front Axle
- Vented

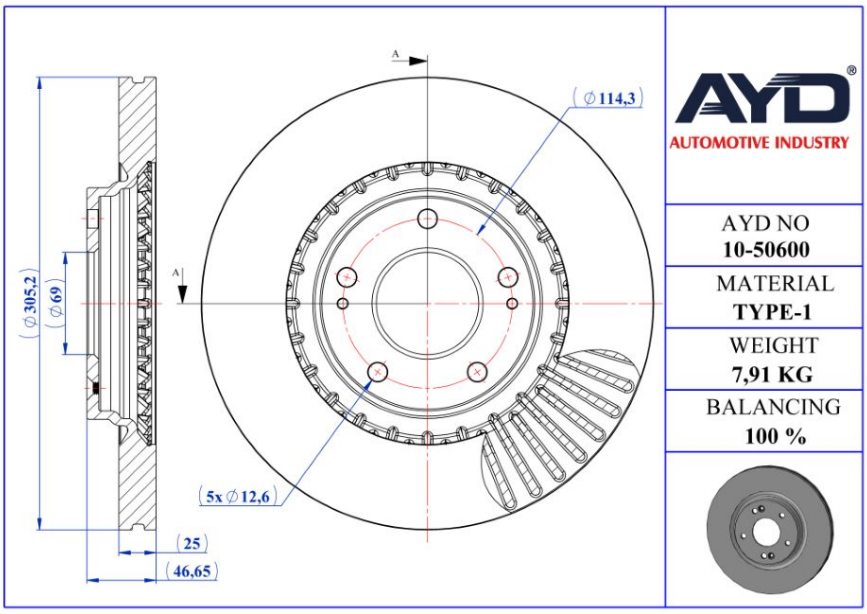

- **Safety**
- **Performance**
- **OEM Standarts**
- **AYD Quality**

OE:
51712C2000
51712D7000
51712J9100

10-50600

Technical Specifications:

Diameter (mm)	Height (mm)	Brake Disc Thickness (mm)	Min. Thickness (mm)	Centering Diameter (mm)	Bolt Hole Circle (mm)	Num. of Holes
305.2	46.65	25	23.4	69	114.3	5+2

HYUNDAI

MODEL	START Y.	END Y.
ELANTRA VI Sedan (AD, ADA)	2015/09	
i30 Van (PDE)	2017/03	
i30 (PDE, PD, PDEN)	2016/11	
i30 FASTBACK (PDE, PDEN)	2017/06	
i30 Station wagon (PDE)	2017/03	
ix35 (LM, EL, ELH)	2009/08	
KONA (OS, OSE, OSI)	2017/06	
TUCSON (TL, TLE)	2015/05	
VELOSTER (JS, JSN)	2018/01	

BRAKE DISC

FREN DISKI

- Front Axle
- Vented

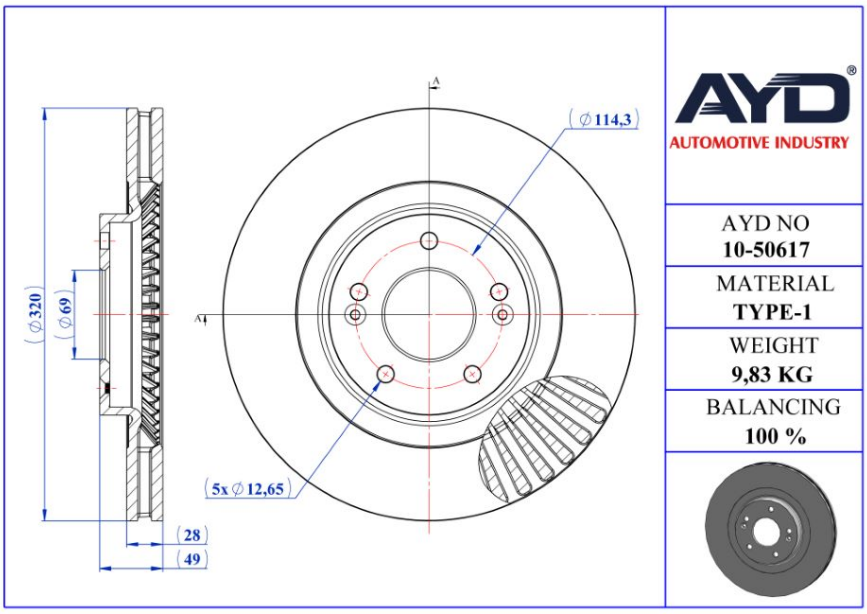

- **Safety**
- **Performance**
- **OEM Standarts**
- **AYD Quality**

OE:
517124Z000

10-50617

Technical Specifications:

Diameter (mm)	Height (mm)	Brake Disc Thickness (mm)	Min. Thickness (mm)	Centering Diameter (mm)	Bolt Hole Circle (mm)	Num. of Holes
320	49	28	26	69	114.3	5+2

HYUNDAI

MODEL	START Y.	END Y.
SANTA FÉ III (DM, DMA)	2012/09	

BRAKE DISC

FREN DISKI

- Front Axle
- Vented

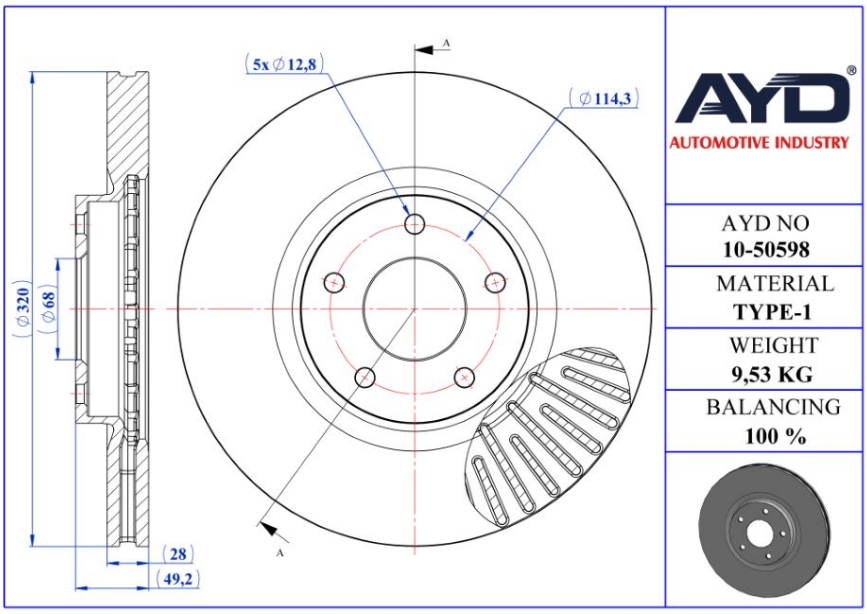

- **Safety**
- **Performance**
- **OEM Standarts**
- **AYD Quality**

OE:
40206EG000

10-50598

Technical Specifications:

Diameter (mm)	Height (mm)	Brake Disc Thickness (mm)	Min. Thickness (mm)	Centering Diameter (mm)	Bolt Hole Circle (mm)	Num. of Holes
320	49.2	28	26	68	114.3	5

INFINITI

MODEL	START Y.	END Y.
G Sedan	2002/08	
M (Y51)	2010/03	
M35	2005/01	
M37	2010/01	
M45	2005/01	

BRAKE DISC

FREN DISKI

- Front Axle
- Vented

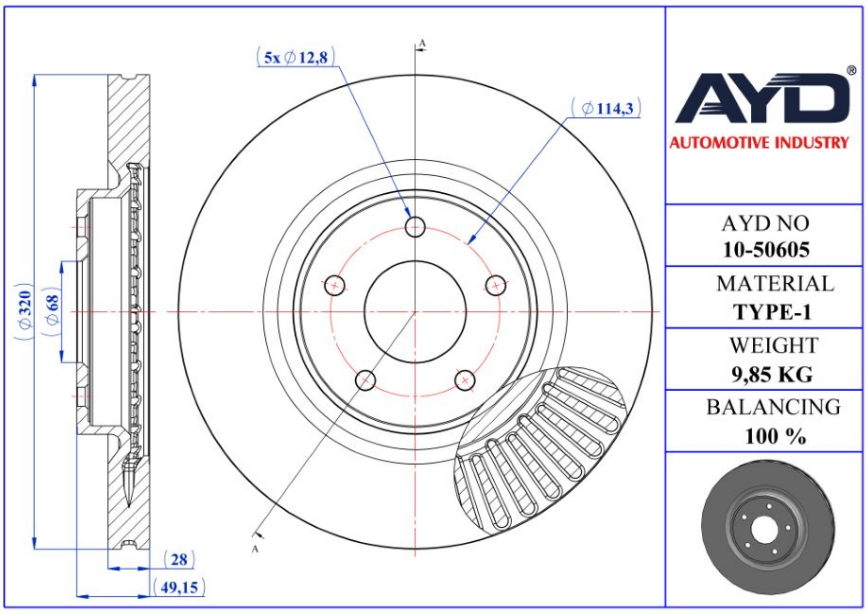

- **Safety**
- **Performance**
- **OEM Standarts**
- **AYD Quality**

OE:
402064GA0A

10-50605

Technical Specifications:

Diameter (mm)	Height (mm)	Brake Disc Thickness (mm)	Min. Thickness (mm)	Centering Diameter (mm)	Bolt Hole Circle (mm)	Num. of Holes
320	49.15	28	26	68	114.3	5

INFINITI

MODEL	START Y.	END Y.
JX SUV (L50)	2012/09	
Q50	2013/04	
QX60	2012/04	

BRAKE DISC

FREN DISKI

- Rear Axle
- Solid

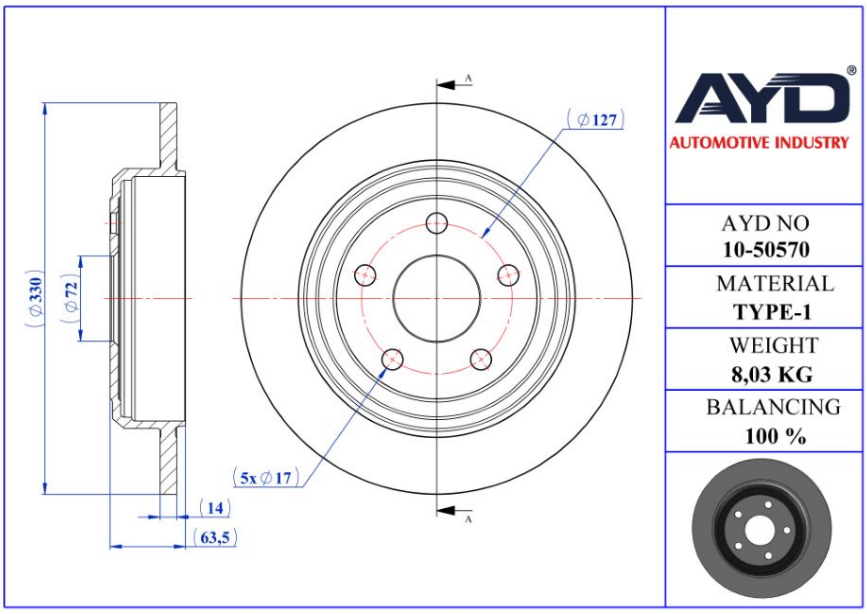

- **Safety**
- **Performance**
- **OEM Standarts**
- **AYD Quality**

OE:
52124763AD
52124763AC
52124763AB

10-50570

Technical Specifications:

Diameter (mm)	Height (mm)	Brake Disc Thickness (mm)	Min. Thickness (mm)	Centering Diameter (mm)	Bolt Hole Circle (mm)	Num. of Holes
330	63.5	14	12.5	72	127	5

JEEP

MODEL	START Y.	END Y.
GRAND CHEROKEE IV (WK, WK2)	2010/06	

BRAKE DISC

FREN DISKI

- Front Axle
- Vented

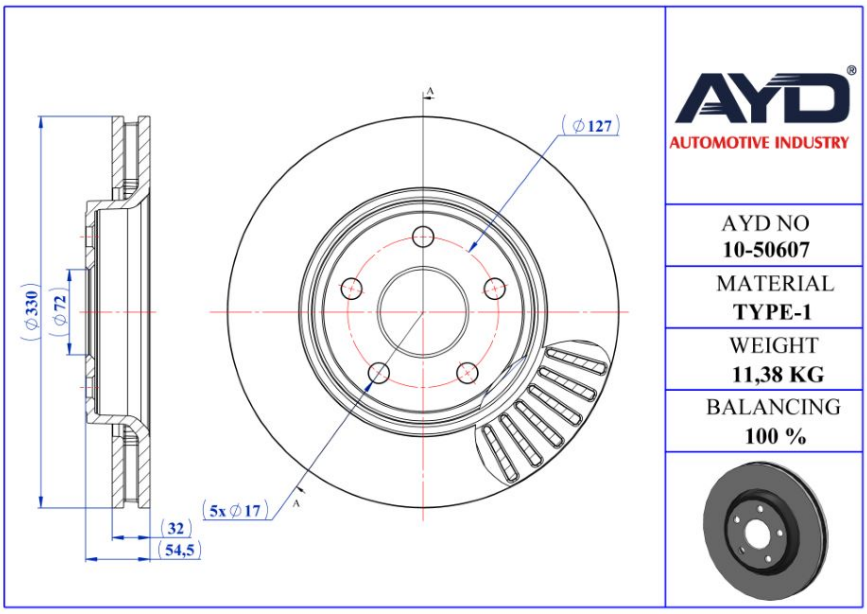

- **Safety**
- **Performance**
- **OEM Standarts**
- **AYD Quality**

OE:
52124762AD

10-50607

Technical Specifications:

Diameter (mm)	Height (mm)	Brake Disc Thickness (mm)	Min. Thickness (mm)	Centering Diameter (mm)	Bolt Hole Circle (mm)	Num. of Holes
330	54.5	32	30.5	72	127	5

JEEP

MODEL	START Y.	END Y.
GRAND CHEROKEE IV (WK, WK2)	2010/06	

BRAKE DISC

FREN DISKI

- Front Axle
- Vented

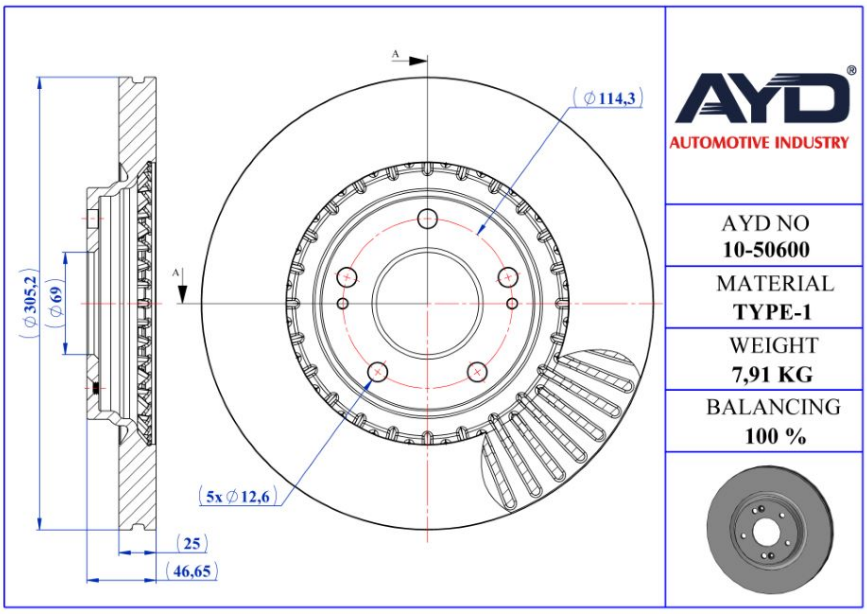

- **Safety**
- **Performance**
- **OEM Standarts**
- **AYD Quality**

OE:
51712C2000
51712D7000
51712J9100

10-50600

Technical Specifications:

Diameter (mm)	Height (mm)	Brake Disc Thickness (mm)	Min. Thickness (mm)	Centering Diameter (mm)	Bolt Hole Circle (mm)	Num. of Holes
305.2	46.65	25	23.4	69	114.3	5+2

KIA

MODEL	START Y.	END Y.
CEED (CD)	2018/03	
CEED Combi Van (CD)	2018/03	
CEED Hatchback Van (CD)	2018/03	
CEED Sportswagon (CD)	2018/03	
NIRO (DE)	2016/09	
OPTIMA (DL3)	2019/12	
OPTIMA (JF)	2015/09	
OPTIMA Sportswagon (JF)	2016/09	
PROCEED (CD)	2018/10	
SOUL III (SK3)	2019/01	
SPORTAGE IV (QL, QLE)	2015/09	

BRAKE DISC

FREN DISKI

- Rear Axle
- Solid

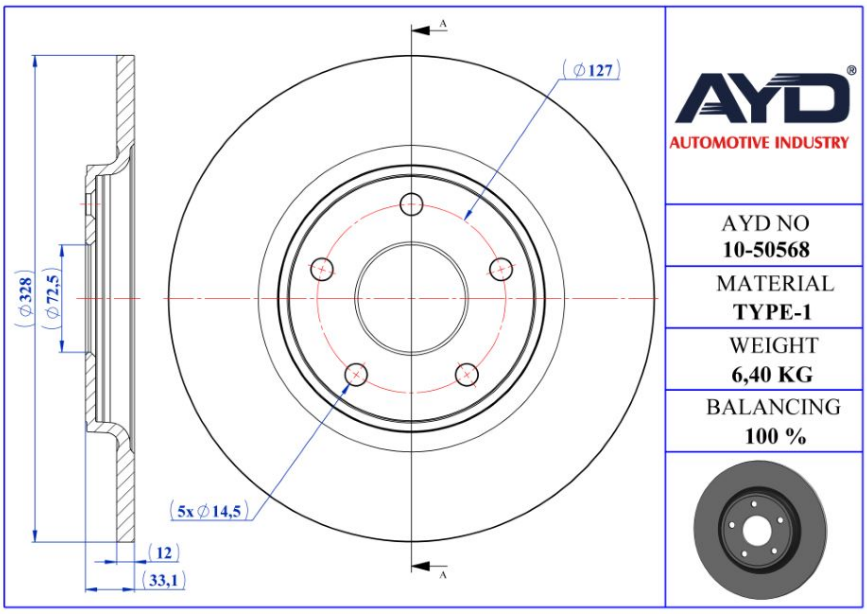

- **Safety**
- **Performance**
- **OEM Standarts**
- **AYD Quality**

OE:
K04779713AB
K04779713AA

10-50568

Technical Specifications:

Diameter (mm)	Height (mm)	Brake Disc Thickness (mm)	Min. Thickness (mm)	Centering Diameter (mm)	Bolt Hole Circle (mm)	Num. of Holes
328	33.1	12	10.4	72.5	127	5

LANCIA

MODEL	START Y.	END Y.
VOYAGER MPV (404_)	2011/09	2014/12

BRAKE DISC

FREN DISKI

- Rear Axle
- Solid

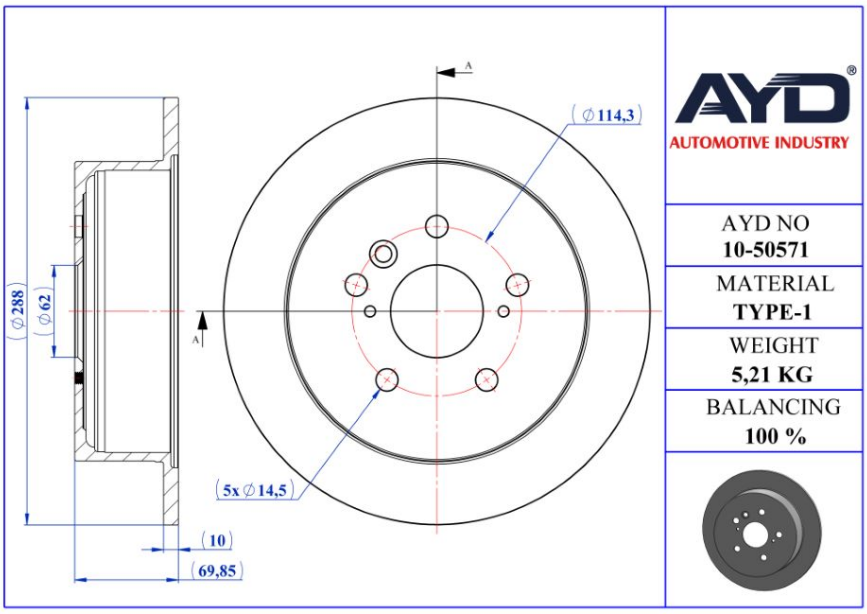

- **Safety**
- **Performance**
- **OEM Standarts**
- **AYD Quality**

OE:
4243148041

10-50571

Technical Specifications:

Diameter (mm)	Height (mm)	Brake Disc Thickness (mm)	Min. Thickness (mm)	Centering Diameter (mm)	Bolt Hole Circle (mm)	Num. of Holes
288	69.85	10	8.5	62	114.3	5+3

LEXUS

MODEL	START Y.	END Y.
RX (_U3_)	2003/02	2008/12

BRAKE DISC

FREN DISKI

- Rear Axle
- Solid

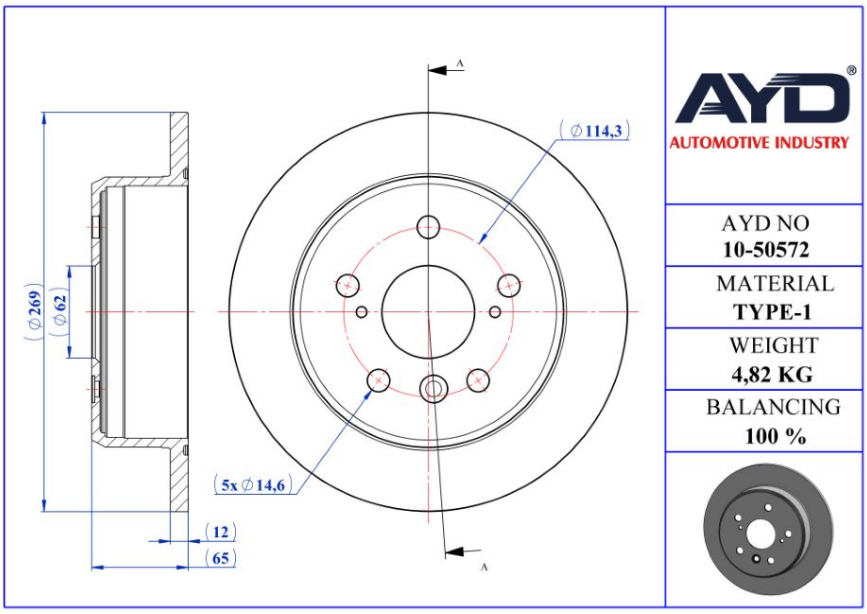

- **Safety**
- **Performance**
- **OEM Standarts**
- **AYD Quality**

OE:
4243106051

10-50572

Technical Specifications:

Diameter (mm)	Height (mm)	Brake Disc Thickness (mm)	Min. Thickness (mm)	Centering Diameter (mm)	Bolt Hole Circle (mm)	Num. of Holes
269	65	12	10.5	62	114.3	5+3

LEXUS

MODEL	START Y.	END Y.
ES (MCV_, VZV_)	1996/08	2008/06

BRAKE DISC

FREN DISKI

- Rear Axle
- Solid

- **Safety**
- **Performance**
- **OEM Standarts**
- **AYD Quality**

OE:
4243102250
4243102260
4243102280

10-50575

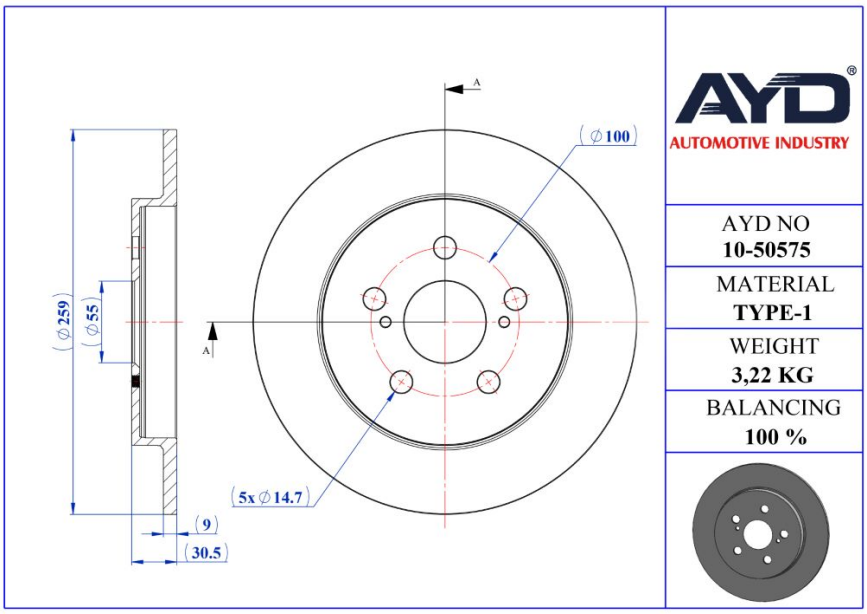

Technical Specifications:

Diameter (mm)	Height (mm)	Brake Disc Thickness (mm)	Min. Thickness (mm)	Centering Diameter (mm)	Bolt Hole Circle (mm)	Num. of Holes
259	30.5	9	7.5	55	100	5+2

LEXUS

MODEL	START Y.	END Y.
CT (ZWA10_)	2010/12	

BRAKE DISC

FREN DISKI

- Front Axle
- Vented

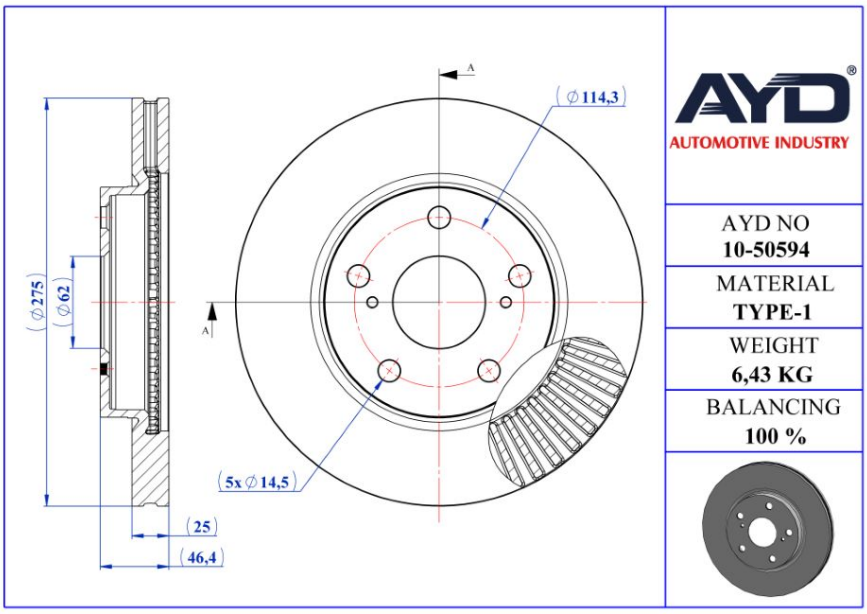

- **Safety**
- **Performance**
- **OEM Standarts**
- **AYD Quality**

OE:
4351242040

10-50594

Technical Specifications:

Diameter (mm)	Height (mm)	Brake Disc Thickness (mm)	Min. Thickness (mm)	Centering Diameter (mm)	Bolt Hole Circle (mm)	Num. of Holes
275	46.4	25	22	62	114.3	5+2

LEXUS

MODEL	START Y.	END Y.
HS (ANF10)	2009/07	2018/01

BRAKE DISC

FREN DISKI

- Rear Axle
- Solid

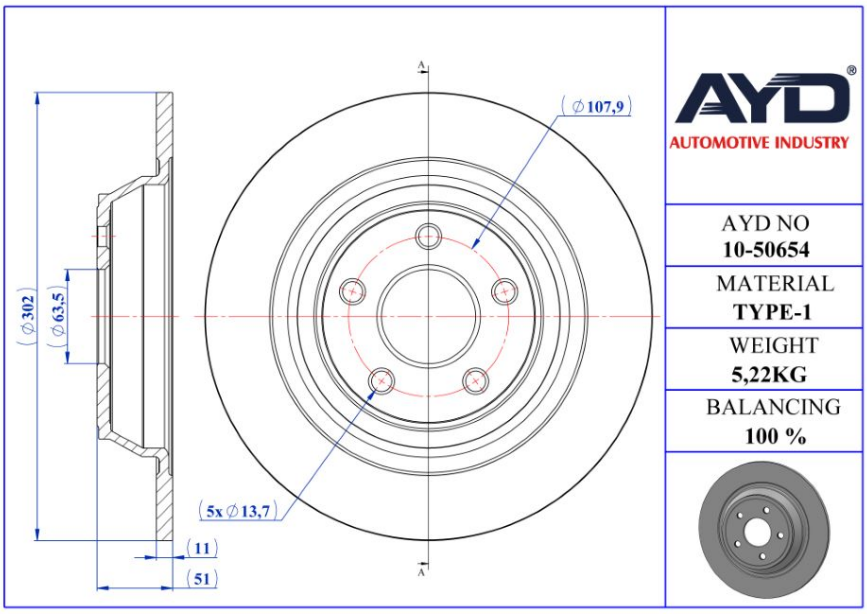

- **Safety**
- **Performance**
- **OEM Standarts**
- **AYD Quality**

OE:
DG9Z2C026A

10-50654

Technical Specifications:

Diameter (mm)	Height (mm)	Brake Disc Thickness (mm)	Min. Thickness (mm)	Centering Diameter (mm)	Bolt Hole Circle (mm)	Num. of Holes
302	51	11	9.5	63.5	107.9	5

LINCOLN

MODEL	START Y.	END Y.
MKZ	2012/09	

BRAKE DISC

FREN DISKI

- Rear Axle
- Solid

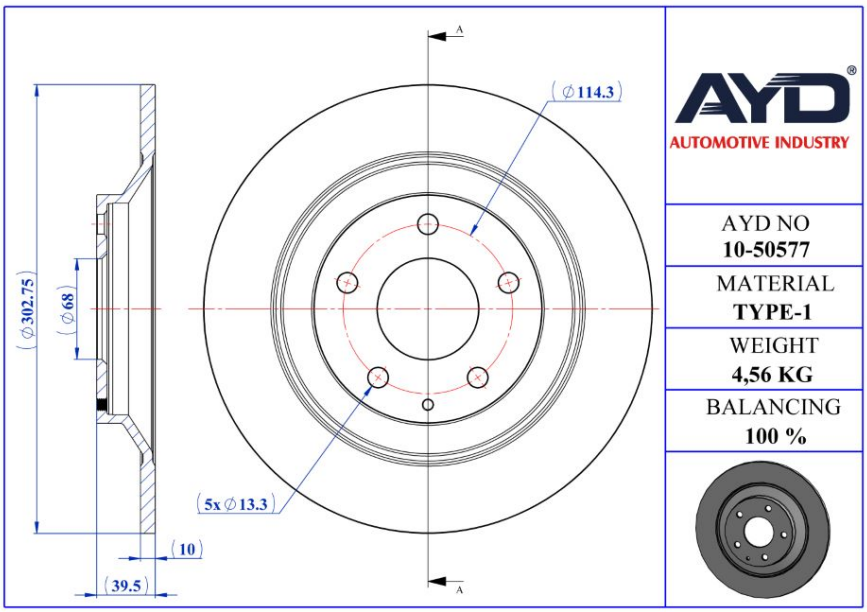

- **Safety**
- **Performance**
- **OEM Standarts**
- **AYD Quality**

OE:
K01126251C
K01126251B
K01126251A

10-50577

Technical Specifications:

Diameter (mm)	Height (mm)	Brake Disc Thickness (mm)	Min. Thickness (mm)	Centering Diameter (mm)	Bolt Hole Circle (mm)	Num. of Holes
302.75	39.5	10	8	68	114.3	5+1

MAZDA

MODEL	START Y.	END Y.
CX-5 (KE, GH)	2011/11	2017/02
CX-5 (KF)	2016/11	
MX-30 (DR)	2020/05	

BRAKE DISC

FREN DISKI

- Front Axle
- Vented

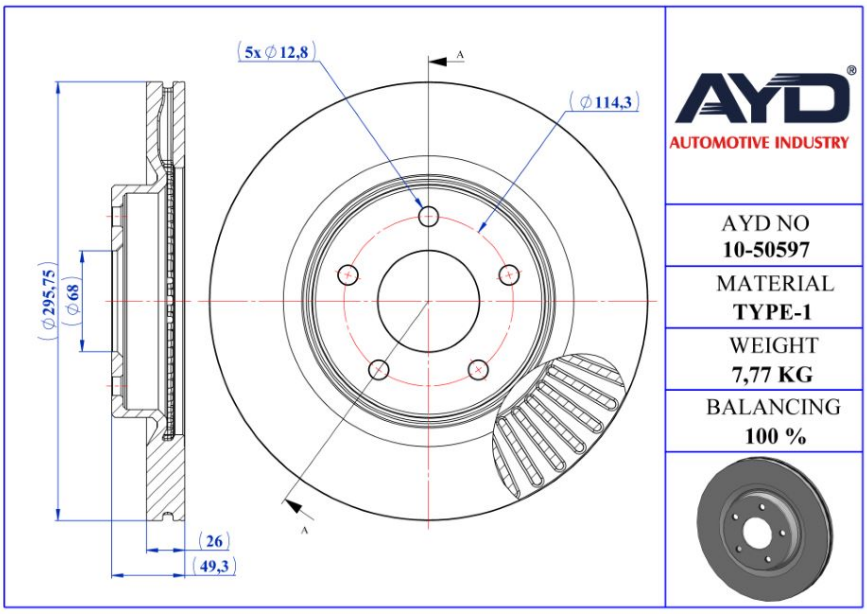

- **Safety**
- **Performance**
- **OEM Standarts**
- **AYD Quality**

OE:
40206JA00A

10-50597

Technical Specifications:

Diameter (mm)	Height (mm)	Brake Disc Thickness (mm)	Min. Thickness (mm)	Centering Diameter (mm)	Bolt Hole Circle (mm)	Num. of Holes
295.75	49.3	26	24	68	114.3	5

NISSAN

MODEL	START Y.	END Y.
ALTIMA (L32)	2006/10	2013/07
ALTIMA (L33)	2012/05	
ALTIMA Coupe (CL32)	2006/10	2013/12

BRAKE DISC

FREN DISKI

- Front Axle
- Vented

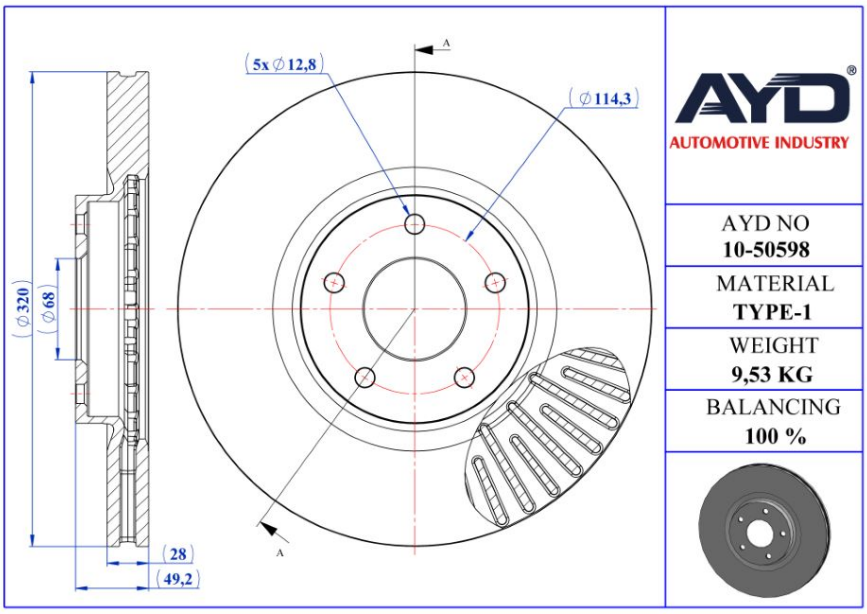

- **Safety**
- **Performance**
- **OEM Standarts**
- **AYD Quality**

OE:
402069N00C
40206EG000

10-50598

Technical Specifications:

Diameter (mm)	Height (mm)	Brake Disc Thickness (mm)	Min. Thickness (mm)	Centering Diameter (mm)	Bolt Hole Circle (mm)	Num. of Holes
320	49.2	28	26	68	114.3	5

NISSAN

MODEL	START Y.	END Y.
MURANO I (Z50)	2002/04	2009/12
MURANO II (Z51)	2007/10	2014/09

BRAKE DISC

FREN DISKI

- Front Axle
- Vented

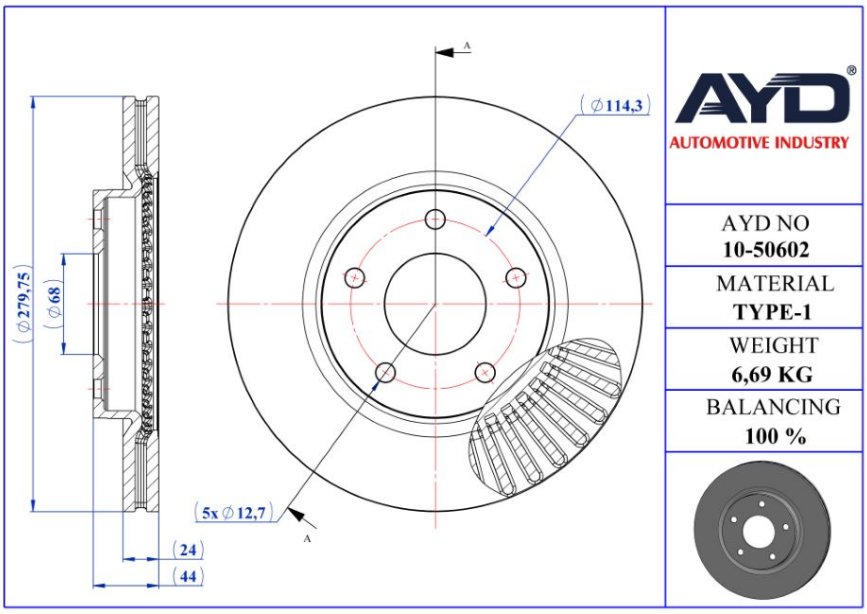

- **Safety**
- **Performance**
- **OEM Standarts**
- **AYD Quality**

OE:
402063SG0B
402063ST0A

10-50602

Technical Specifications:

Diameter (mm)	Height (mm)	Brake Disc Thickness (mm)	Min. Thickness (mm)	Centering Diameter (mm)	Bolt Hole Circle (mm)	Num. of Holes
279.75	44	24	22	68	114.3	5

NISSAN

MODEL	START Y.	END Y.
SENTRA VII (B17)	2012/08	

BRAKE DISC

FREN DISKI

- Front Axle
- Vented

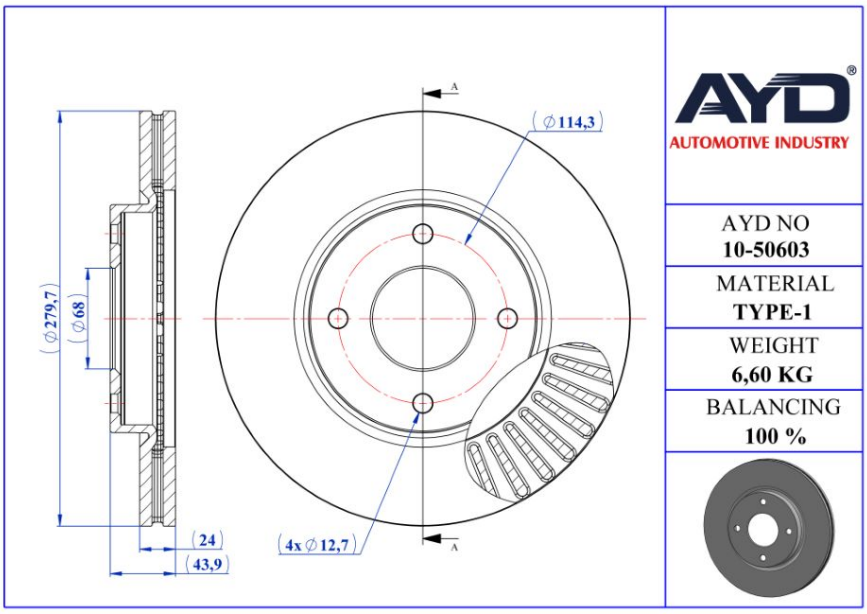

- **Safety**
- **Performance**
- **OEM Standarts**
- **AYD Quality**

OE:
40206ET02C
40206ET00C

10-50603

Technical Specifications:

Diameter (mm)	Height (mm)	Brake Disc Thickness (mm)	Min. Thickness (mm)	Centering Diameter (mm)	Bolt Hole Circle (mm)	Num. of Holes
279.7	43.9	24	22	68	114.3	4

NISSAN

MODEL	START Y.	END Y.
CUBE (Z12)	2007/09	
TIIDA Hatchback (C11)	2004/05	2013/12
TIIDA Sedan (SC11)	2004/05	2013/12

BRAKE DISC

FREN DISKI

- Front Axle
- Vented

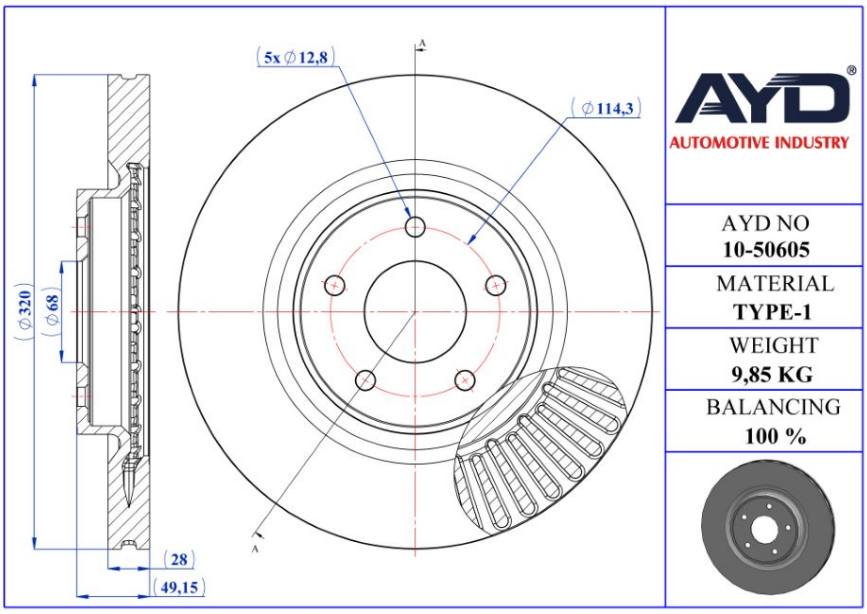

- **Safety**
- **Performance**
- **OEM Standarts**
- **AYD Quality**

OE:
402063JA0A
402063JA0C

10-50605

Technical Specifications:

Diameter (mm)	Height (mm)	Brake Disc Thickness (mm)	Min. Thickness (mm)	Centering Diameter (mm)	Bolt Hole Circle (mm)	Num. of Holes
320	49.15	28	26	68	114.3	5

NISSAN

MODEL	START Y.	END Y.
MURANO III (Z52_)	2014/10	
PATHFINDER IV (R52)	2012/09	

BRAKE DISC

FREN DISKI

- Rear Axle
- Vented

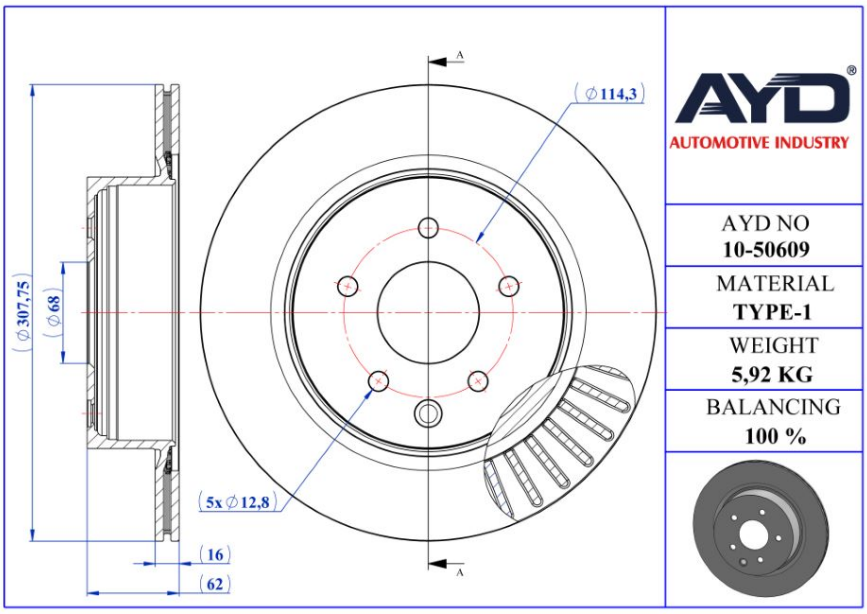

- **Safety**
- **Performance**
- **OEM Standarts**
- **AYD Quality**

OE:
432069N00B
432069N00A

10-50609

Technical Specifications:

Diameter (mm)	Height (mm)	Brake Disc Thickness (mm)	Min. Thickness (mm)	Centering Diameter (mm)	Bolt Hole Circle (mm)	Num. of Holes
307.75	62	16	14	68	114.3	5+1

NISSAN

MODEL	START Y.	END Y.
MAXIMA VII (A35)	2008/09	

BRAKE DISC

FREN DISKI

- Rear Axle
- Solid

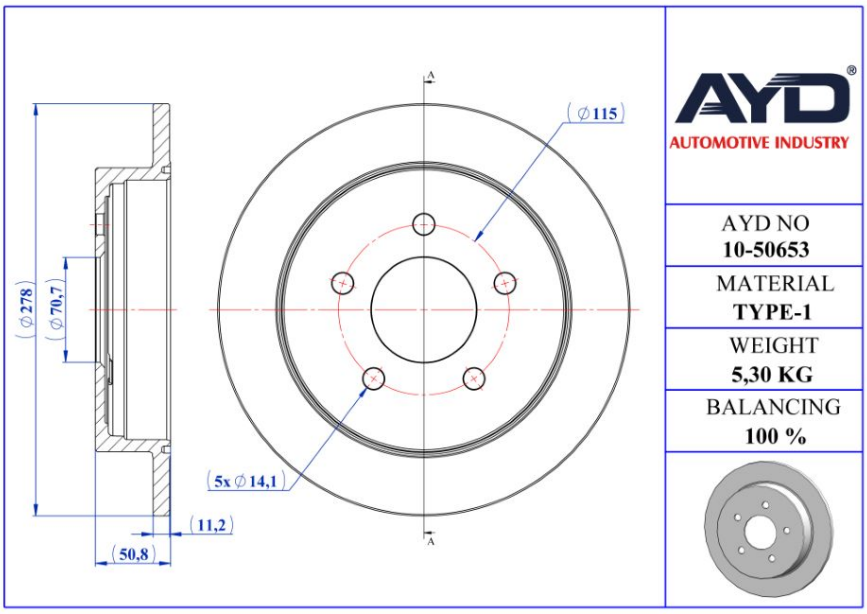

- **Safety**
- **Performance**
- **OEM Standarts**
- **AYD Quality**

OE:
19303830

10-50653

Technical Specifications:

Diameter (mm)	Height (mm)	Brake Disc Thickness (mm)	Min. Thickness (mm)	Centering Diameter (mm)	Bolt Hole Circle (mm)	Num. of Holes
278	50.8	11.2	9	70.7	115	5

OLDSMOBILE

MODEL	START Y.	END Y.
ALERO Coupe	1998/09	2004/12
ALERO Sedan	1998/09	2004/12
INTRIGUE Sedan	1997/09	2002/12

BRAKE DISC

FREN DISKI

- Rear Axle
- Solid

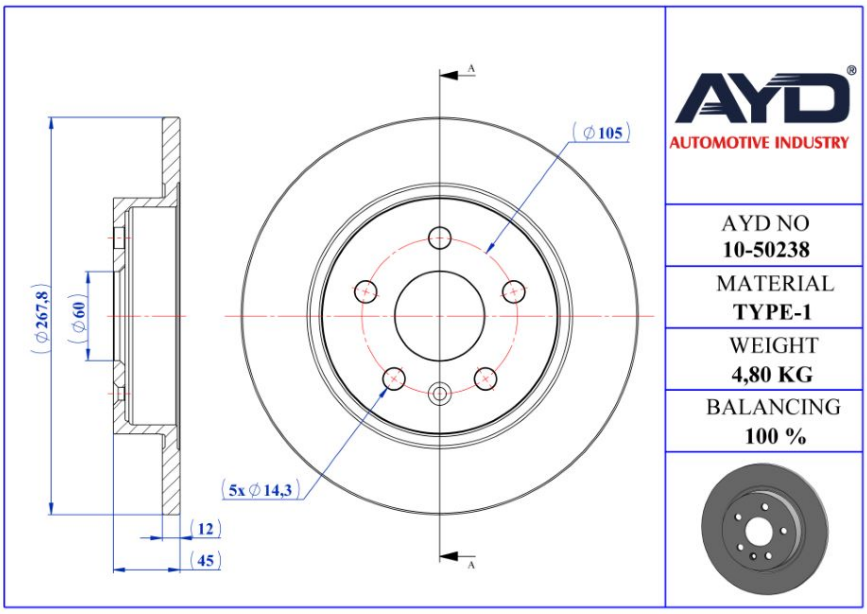

·Safety
·Performance
·OEM Standarts
·AYD Quality

OE:
569074
13502134
569072

10-50238

Technical Specifications:

Diameter (mm)	Height (mm)	Brake Disc Thickness (mm)	Min. Thickness (mm)	Centering Diameter (mm)	Bolt Hole Circle (mm)	Num. of Holes
267.8	45	12	10	60	105	5+1

OPEL

MODEL	START Y.	END Y.
ASTRA J (P10)	2009/09	2015/10
ASTRA J GTC	2011/10	
ASTRA J Sedan	2012/06	
ASTRA J Sports Tourer (P10)	2010/10	2015/10
MOKKA / MOKKA X (J13)	2012/06	

BRAKE DISC

FREN DISKI

- Rear Axle
- Solid

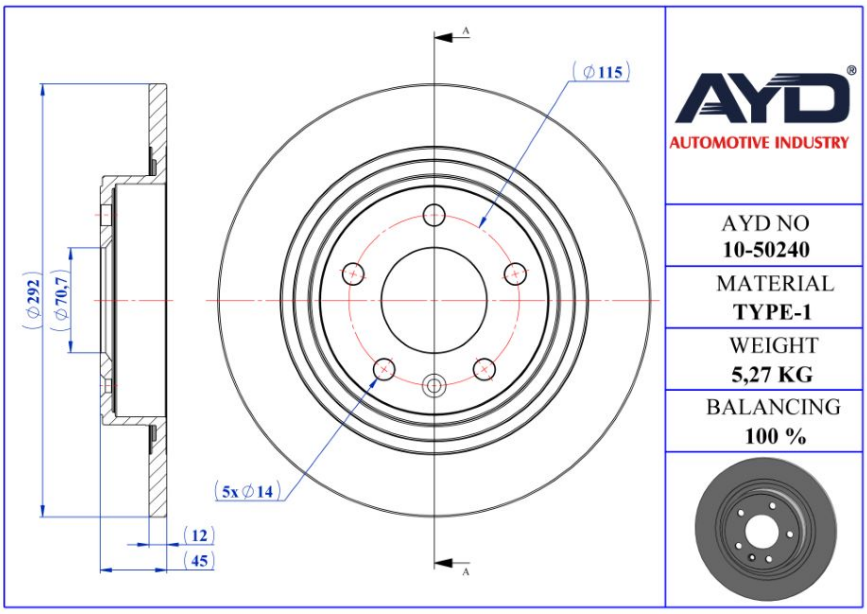

- **Safety**
- **Performance**
- **OEM Standarts**
- **AYD Quality**

OE:
13502137
569099
569075

10-50240

Technical Specifications:

Diameter (mm)	Height (mm)	Brake Disc Thickness (mm)	Min. Thickness (mm)	Centering Diameter (mm)	Bolt Hole Circle (mm)	Num. of Holes
292	45	12	10	70.7	115	5+1

OPEL

MODEL	START Y.	END Y.
ASTRA J (P10)	2009/09	2015/10
ASTRA J van (P10)	2009/09	2015/10
ASTRA J (P10)	2009/09	2015/10
ASTRA J GTC	2011/10	
ASTRA J Sedan	2012/06	
ASTRA J Sports Tourer (P10)	2010/10	2015/10
CASCADA (W13)	2013/03	2019/04
ZAFIRA TOURER C (P12)	2011/10	

BRAKE DISC

FREN DISKI

- Front Axle
- Vented

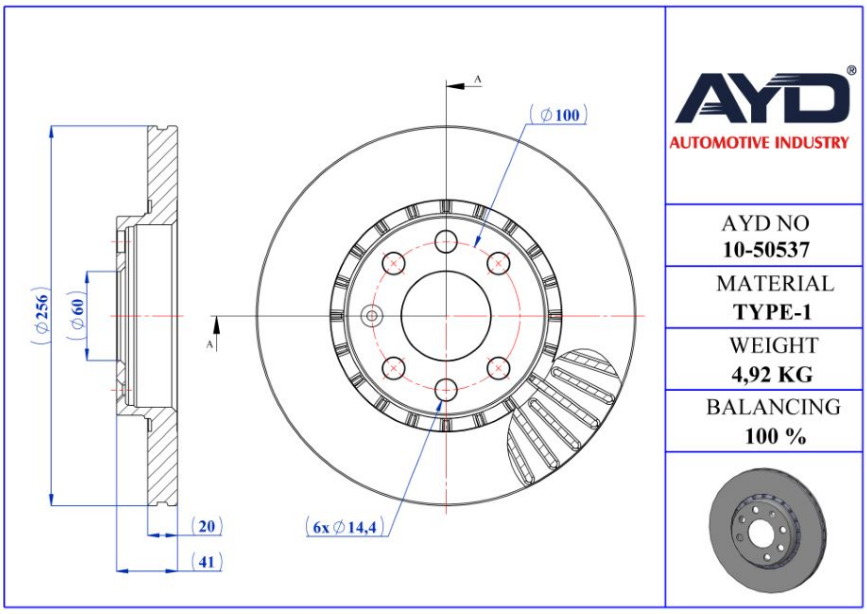

- **Safety**
- **Performance**
- **OEM Standarts**
- **AYD Quality**

OE:
569046
569055
90375224

10-50537

Technical Specifications:

Diameter (mm)	Height (mm)	Brake Disc Thickness (mm)	Min. Thickness (mm)	Centering Diameter (mm)	Bolt Hole Circle (mm)	Num. of Holes
256	41	20	17	60	100	6+1

OPEL

MODEL	START Y.	END Y.
ASTRA F (T92)	1991/09	1998/09
ASTRA F Hatchback (T92)	1991/09	1998/02
ASTRA F Station wagon (T92)	1991/09	1998/01
CORSA B (S93)	1993/03	2002/12
TIGRA (S93)	1994/07	2000/12
VECTRA A (J89)	1988/08	1995/12
VECTRA A Hatchback (J89)	1988/04	1995/12

BRAKE DISC

FREN DISKI

- Rear Axle
- Solid

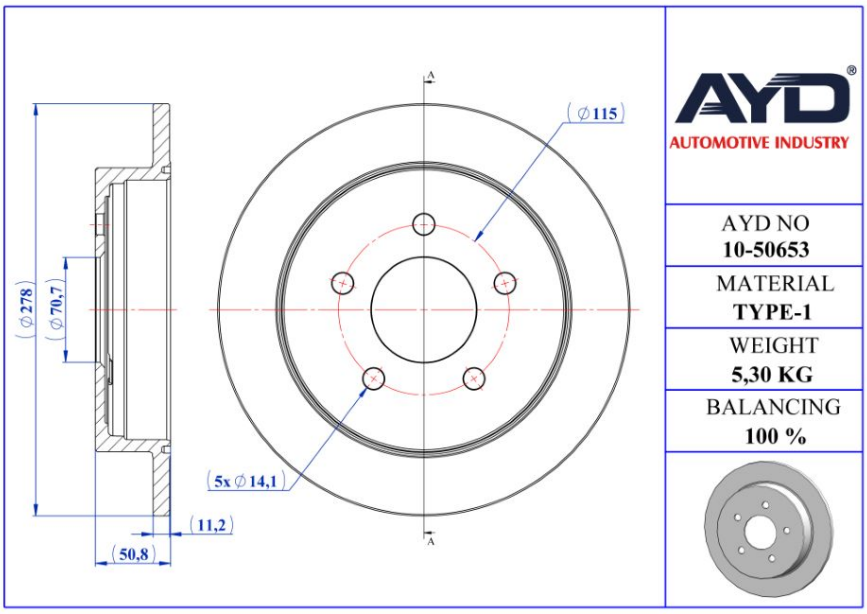

- **Safety**
- **Performance**
- **OEM Standarts**
- **AYD Quality**

OE:
19303830

10-50653

Technical Specifications:

Diameter (mm)	Height (mm)	Brake Disc Thickness (mm)	Min. Thickness (mm)	Centering Diameter (mm)	Bolt Hole Circle (mm)	Num. of Holes
278	50.8	11.2	9	70.7	115	5

PONTIAC

MODEL	START Y.	END Y.
GRAND AM Coupe	1997/09	2005/12
GRAND AM Sedan	1998/09	2005/12
GRAND PRIX VI Coupe	1996/07	2003/12
GRAND PRIX VI Sedan	1996/07	2003/12

BRAKE DISC

FREN DISKI

- Rear Axle
- Solid

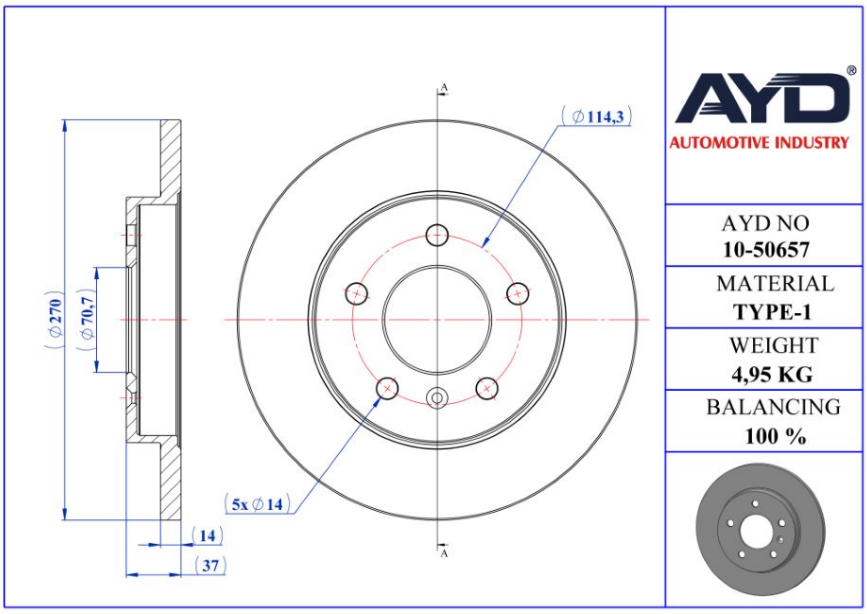

- **Safety**
- **Performance**
- **OEM Standarts**
- **AYD Quality**

OE:
18048699

10-50657

Technical Specifications:

Diameter (mm)	Height (mm)	Brake Disc Thickness (mm)	Min. Thickness (mm)	Centering Diameter (mm)	Bolt Hole Circle (mm)	Num. of Holes
270	37	14	12.5	70.7	114.3	5+1

PONTIAC

MODEL	START Y.	END Y.
GRAND PRIX Sedan	2003/09	2008/12

BRAKE DISC

FREN DISKI

- Front Axle
- Vented

- **Safety**
- **Performance**
- **OEM Standarts**
- **AYD Quality**

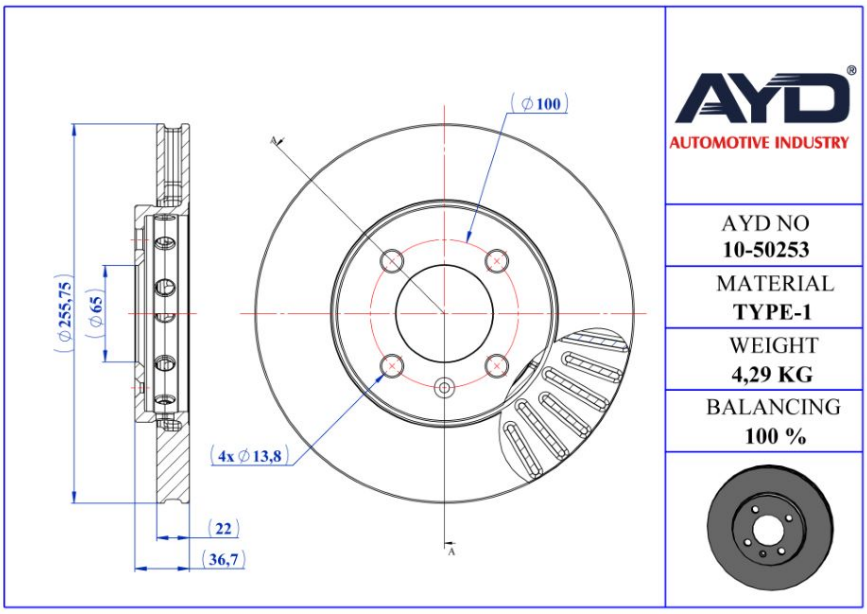

OE:
1S0615301

10-50253

Technical Specifications:

Diameter (mm)	Height (mm)	Brake Disc Thickness (mm)	Min. Thickness (mm)	Centering Diameter (mm)	Bolt Hole Circle (mm)	Num. of Holes
255.75	36.7	22	20	65	100	4+1

SEAT

MODEL	START Y.	END Y.
Mii (KF1, KE1)	2011/10	

BRAKE DISC

FREN DISKI

- Front Axle
- Vented

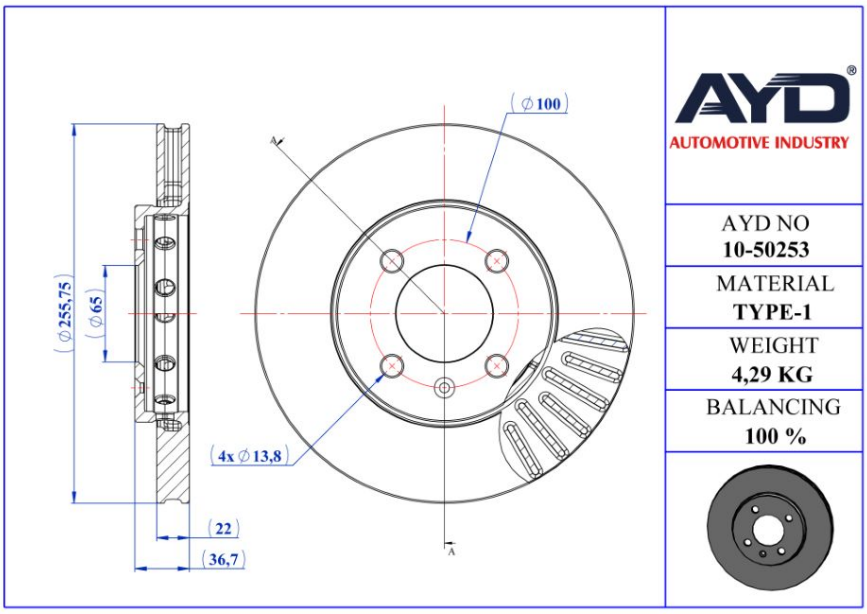

- **Safety**
- **Performance**
- **OEM Standarts**
- **AYD Quality**

OE:
1S0615301H
1S0615301J
1S0615301L

10-50253

Technical Specifications:

Diameter (mm)	Height (mm)	Brake Disc Thickness (mm)	Min. Thickness (mm)	Centering Diameter (mm)	Bolt Hole Circle (mm)	Num. of Holes
255.75	36.7	22	20	65	100	4+1

SKODA

MODEL	START Y.	END Y.
CITIGO (NF1)	2011/10	2019/08

BRAKE DISC

FREN DISKI

- Rear Axle
- Solid

- **Safety**
- **Performance**
- **OEM Standarts**
- **AYD Quality**

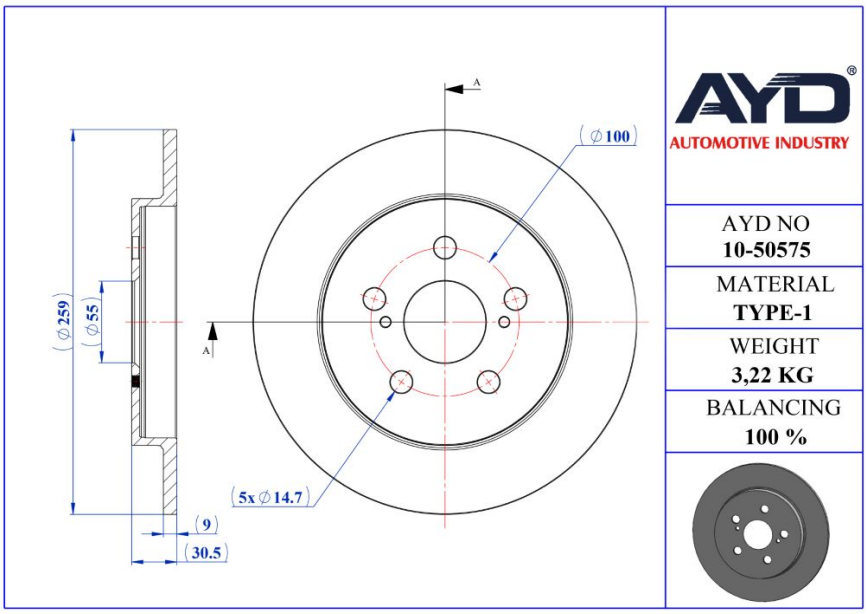

OE:
4243102250
4243102260

10-50575

Technical Specifications:

Diameter (mm)	Height (mm)	Brake Disc Thickness (mm)	Min. Thickness (mm)	Centering Diameter (mm)	Bolt Hole Circle (mm)	Num. of Holes
259	30.5	9	7.5	55	100	5+2

SUBARU

MODEL	START Y.	END Y.
TREZIA	2010/11	

BRAKE DISC

FREN DISKI

- Rear Axle
- Solid

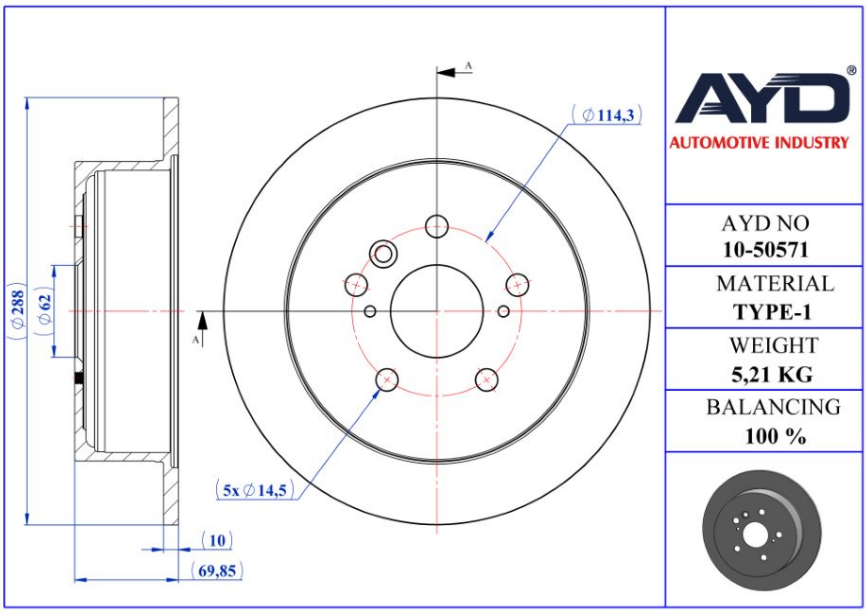

·Safety
·Performance
·OEM Standarts
·AYD Quality

OE:
4243148041
4243148050
4243148040

10-50571

Technical Specifications:

Diameter (mm)	Height (mm)	Brake Disc Thickness (mm)	Min. Thickness (mm)	Centering Diameter (mm)	Bolt Hole Circle (mm)	Num. of Holes
288	69.85	10	8.5	62	114.3	5+3

TOYOTA

MODEL	START Y.	END Y.
HARRIER (_U3_)	2003/02	2013/12
HIGHLANDER / KLUGER (_U2_)	2000/06	2010/12

BRAKE DISC

FREN DISKI

- Rear Axle
- Solid

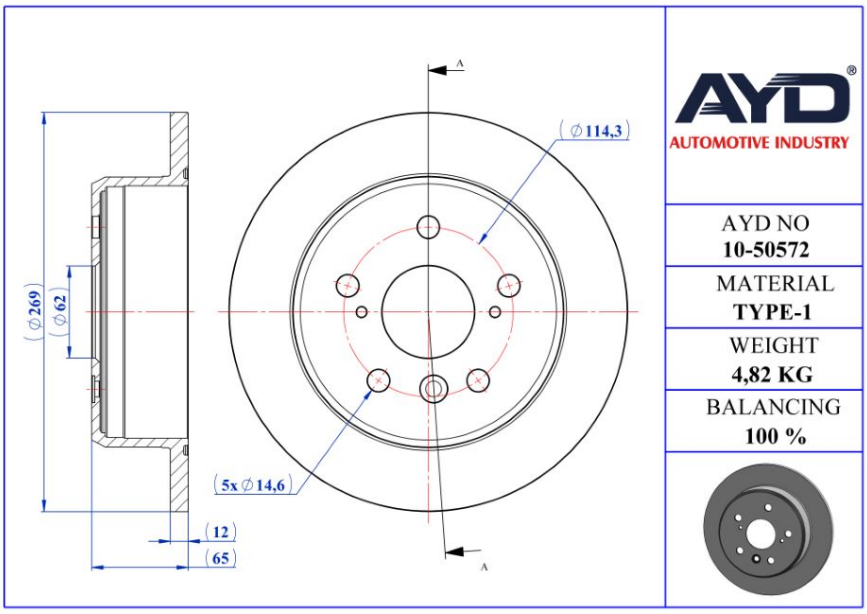

- **Safety**
- **Performance**
- **OEM Standarts**
- **AYD Quality**

OE:
4243106051
4243106050

10-50572

Technical Specifications:

Diameter (mm)	Height (mm)	Brake Disc Thickness (mm)	Min. Thickness (mm)	Centering Diameter (mm)	Bolt Hole Circle (mm)	Num. of Holes
269	65	12	10.5	62	114.3	5+3

TOYOTA

MODEL	START Y.	END Y.
AVALON Sedan (_X3_)	2005/01	2012/11
CAMRY Sedan (_V3_)	2001/08	2006/11

BRAKE DISC

FREN DISKI

- Rear Axle
- Solid

- **Safety**
- **Performance**
- **OEM Standarts**
- **AYD Quality**

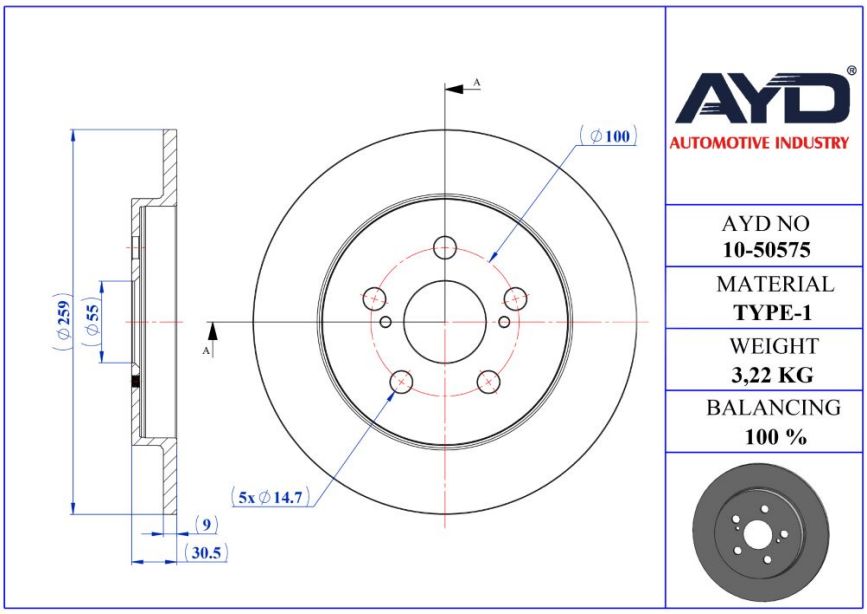

OE:
4243102200

10-50575

Technical Specifications:

Diameter (mm)	Height (mm)	Brake Disc Thickness (mm)	Min. Thickness (mm)	Centering Diameter (mm)	Bolt Hole Circle (mm)	Num. of Holes
259	30.5	9	7.5	55	100	5+2

TOYOTA

MODEL	START Y.	END Y.
PRIUS (_W3_)	2008/06	
PRIUS (_W5_)	2015/09	
PRIUS PHV (_W52_)	2016/01	
VERSO S (_P12_)	2010/11	2016/10

BRAKE DISC

FREN DISKI

- Front Axle
- Vented

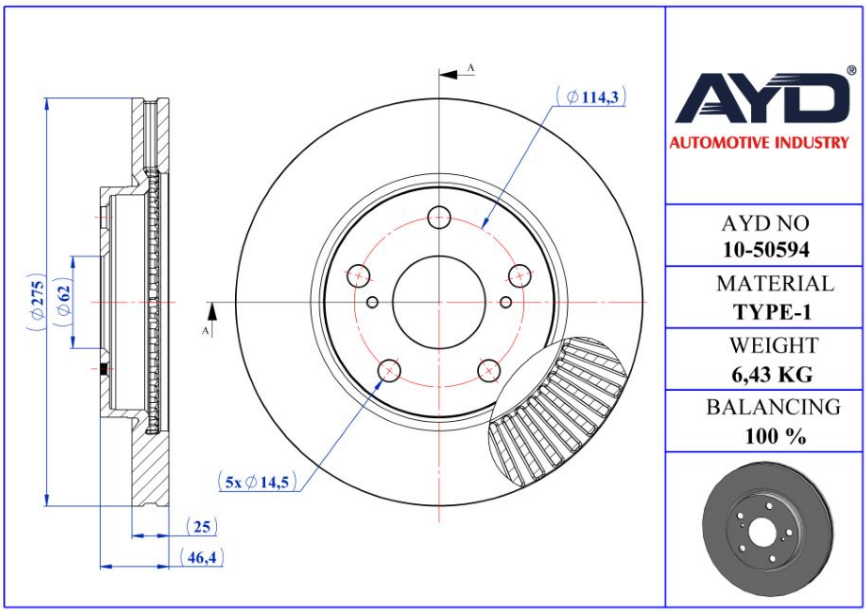

- **Safety**
- **Performance**
- **OEM Standarts**
- **AYD Quality**

OE:
4351242040
4351242080

10-50594

Technical Specifications:

Diameter (mm)	Height (mm)	Brake Disc Thickness (mm)	Min. Thickness (mm)	Centering Diameter (mm)	Bolt Hole Circle (mm)	Num. of Holes
275	46.4	25	22	62	114.3	5+2

TOYOTA

MODEL	START Y.	END Y.
PRIUS PLUS (_W4_)	2011/05	2014/08
RAV 4 III (_A3_)	2005/06	
RAV 4 IV (_A4_)	2012/12	

BRAKE DISC

FREN DISKI

- Front Axle
- Vented

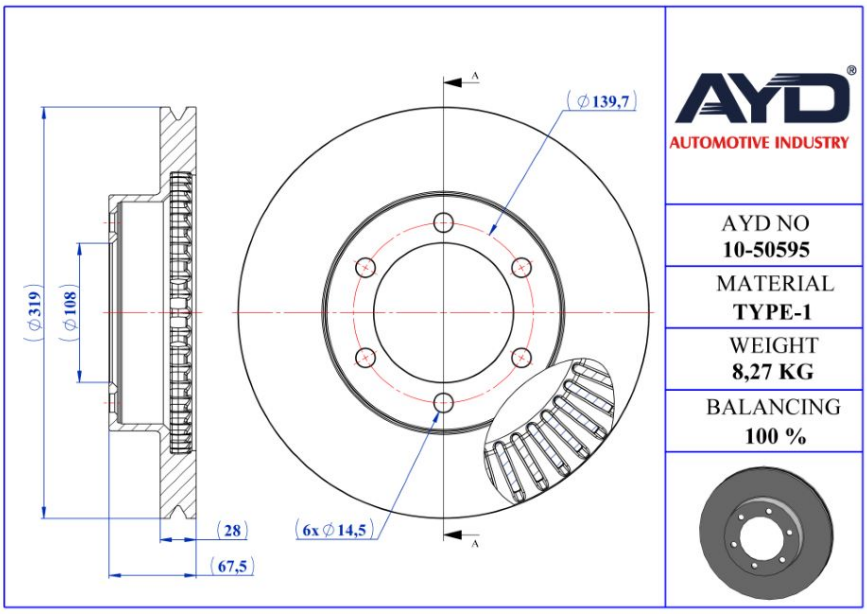

- **Safety**
- **Performance**
- **OEM Standarts**
- **AYD Quality**

OE:
4351235322
4351235320
4351204050

10-50595

Technical Specifications:

Diameter (mm)	Height (mm)	Brake Disc Thickness (mm)	Min. Thickness (mm)	Centering Diameter (mm)	Bolt Hole Circle (mm)	Num. of Holes
319	67.5	28	26	108	139.7	6

TOYOTA

MODEL	START Y.	END Y.
4 RUNNER IV (_N21_)	2002/08	2009/12
LAND CRUISER PRADO (_J12_)	2002/09	2010/12

BRAKE DISC

FREN DISKI

- Rear Axle
- Solid

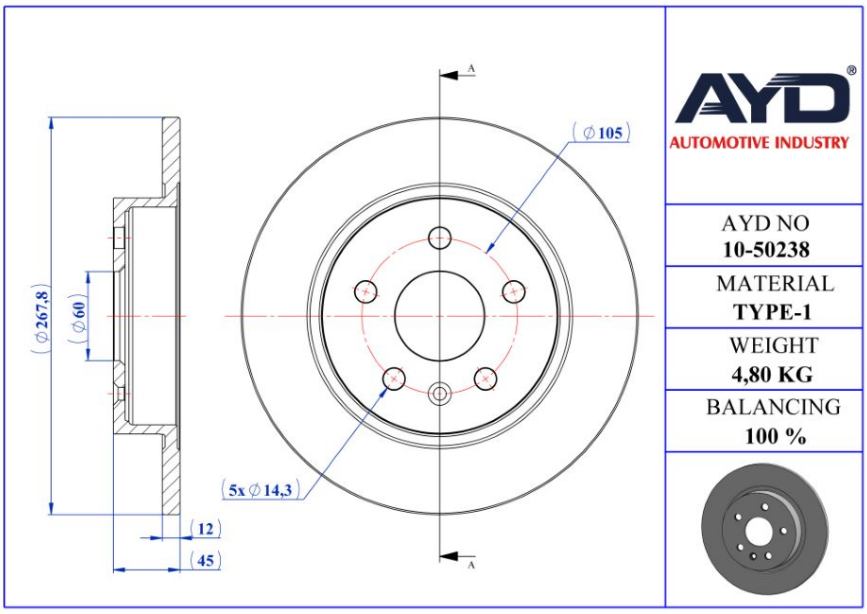

- **Safety**
- **Performance**
- **OEM Standarts**
- **AYD Quality**

OE:
13502135
13502134

10-50238

Technical Specifications:

Diameter (mm)	Height (mm)	Brake Disc Thickness (mm)	Min. Thickness (mm)	Centering Diameter (mm)	Bolt Hole Circle (mm)	Num. of Holes
267.8	45	12	10	60	105	5+1

VAUXHALL

MODEL	START Y.	END Y.
ASTRA Mk VI (J) (P10)	2009/12	2015/10
ASTRA Mk VI (J) GTC (P10)	2011/10	2015/10
ASTRA Mk VI (J) Sedan (P10)	2012/06	2015/10
ASTRA Mk VI (J) Station wagon (P10)	2010/10	2015/10
MOKKA / MOKKA X (J13)	2012/06	

BRAKE DISC

FREN DISKI

- Rear Axle
- Solid

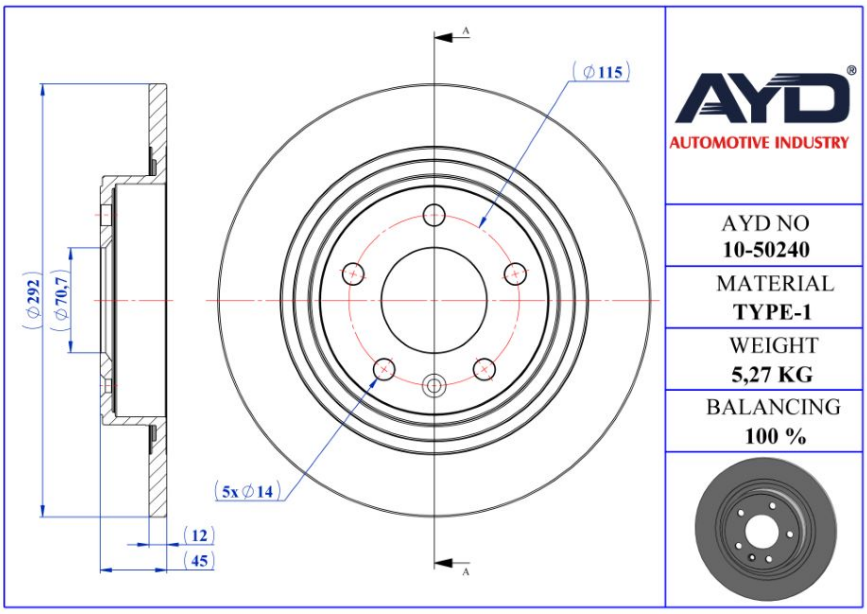

- **Safety**
- **Performance**
- **OEM Standarts**
- **AYD Quality**

OE:
13502138
23118061

10-50240

Technical Specifications:

Diameter (mm)	Height (mm)	Brake Disc Thickness (mm)	Min. Thickness (mm)	Centering Diameter (mm)	Bolt Hole Circle (mm)	Num. of Holes
292	45	12	10	70.7	115	5+1

VAUXHALL

MODEL	START Y.	END Y.
ASTRA Mk VI (J) (P10)	2009/12	2015/10
ASTRA Mk VI (J) GTC (P10)	2011/10	2015/10
ASTRA Mk VI (J) Sedan (P10)	2012/06	2015/10
ASTRA Mk VI (J) Station wagon (P10)	2010/10	2015/10
CASCADA Cabrio (W13)	2013/02	
ZAFIRA Mk III (P12)	2011/10	2018/08

BRAKE DISC

FREN DISKI

- Front Axle
- Vented

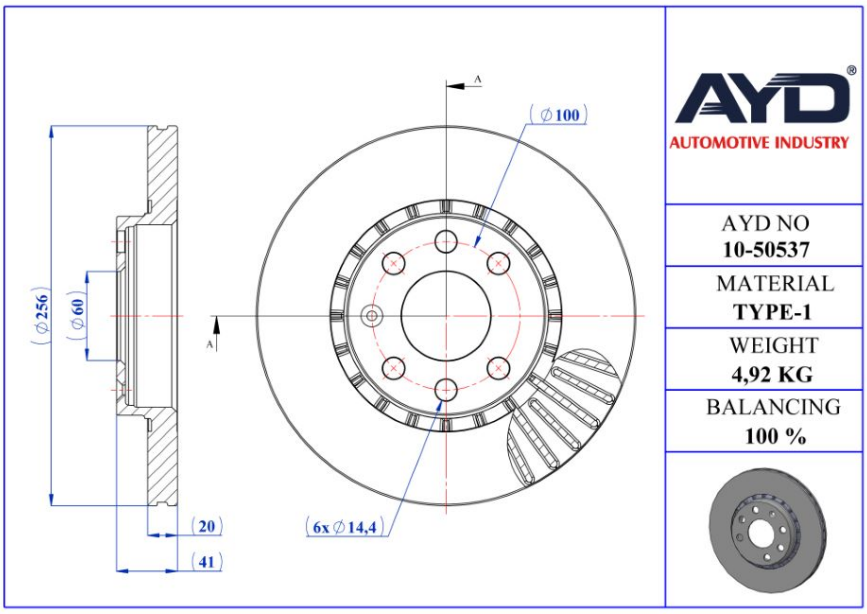

- **Safety**
- **Performance**
- **OEM Standarts**
- **AYD Quality**

OE:
569046
569055
90421727

10-50537

Technical Specifications:

Diameter (mm)	Height (mm)	Brake Disc Thickness (mm)	Min. Thickness (mm)	Centering Diameter (mm)	Bolt Hole Circle (mm)	Num. of Holes
256	41	20	17	60	100	6+1

VAUXHALL

MODEL	START Y.	END Y.
ASTRA Mk III (F) Hatchback (T92)	1991/09	1998/02
ASTRA Mk III (F) Sedan (T92)	1991/09	1998/09
ASTRA Mk III (F) Station wagon (T92)	1991/03	1998/12
CAVALIER Mk III Hatchback (J89)	1988/09	1995/11
CAVALIER Mk III Sedan (J89)	1988/08	1995/11
CORSA Mk I (B) (S93)	1992/12	2000/09
TIGRA Mk I (S93)	1994/07	2000/12

BRAKE DISC

FREN DISKI

- Front Axle
- Vented

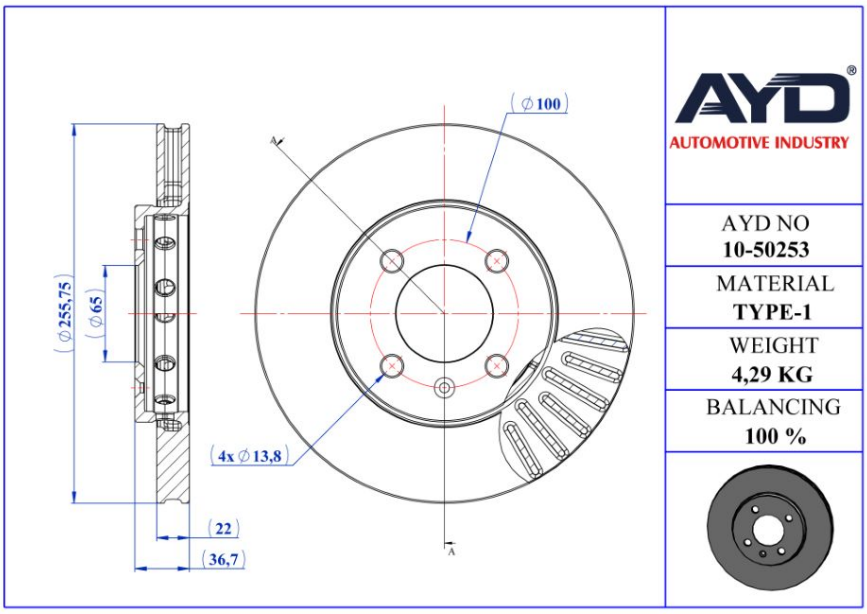

- **Safety**
- **Performance**
- **OEM Standarts**
- **AYD Quality**

OE:
1S0615301H
1S0615301J
1S0615301L

10-50253

Technical Specifications:

Diameter (mm)	Height (mm)	Brake Disc Thickness (mm)	Min. Thickness (mm)	Centering Diameter (mm)	Bolt Hole Circle (mm)	Num. of Holes
255.75	36.7	22	20	65	100	4+1

VW

MODEL	START Y.	END Y.
LOAD UP (121, 122, BL1, BL2)	2014/12	
UP! (121, 122, BL1, BL2, BL3, 123)	2011/08	

BRAKE DISC

FREN DISKI

- Rear Axle
- Solid

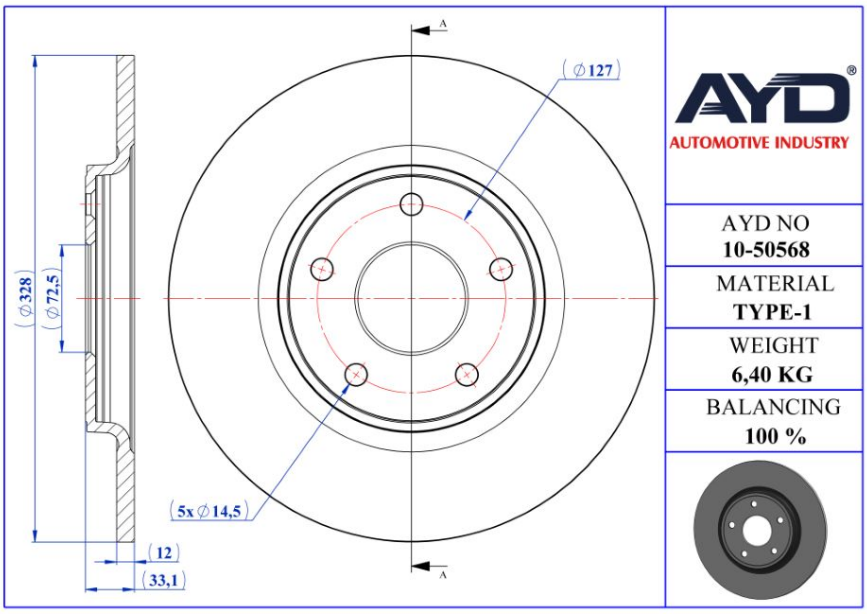

- **Safety**
- **Performance**
- **OEM Standarts**
- **AYD Quality**

OE:
7B0615601C

10-50568

Technical Specifications:

Diameter (mm)	Height (mm)	Brake Disc Thickness (mm)	Min. Thickness (mm)	Centering Diameter (mm)	Bolt Hole Circle (mm)	Num. of Holes
328	33.1	12	10.4	72.5	127	5

VW

MODEL	START Y.	END Y.
ROUTAN	2008/09	2013/12